DocuSign Envelope ID: FB43C1FC-10BE-46F7-8F3D-F805A0DCDE6B

09/08/99

See Sheet 1-B for Conventional Symbols
See Sheet 1-A for Index of Sheets, General Notes, and List of Standard Drawings

STATE	STATE PROJECT REFERENCE NO.	SHEET NO.	TOTAL SHEETS
N.C.	U-5999	1	

STATE PROJ. NO.	F.A. PROJ. NO.	DESCRIPTION
47117.1.1	N/A	P.E.
47117.2.1	N/A	ROW
47117.2.1	N/A	UTIL.
47117.3.1	N/A	CONSTR.

STATE OF NORTH CAROLINA
DIVISION OF HIGHWAYS

JOHNSTON COUNTY

LOCATION: KELLIE DRIVE FROM BOOKER DAIRY ROAD (SR 1923) TO BUFFALO ROAD (SR 1003)

TYPE OF WORK: GRADING, PAVING, DRAINAGE, AND SIGNAL

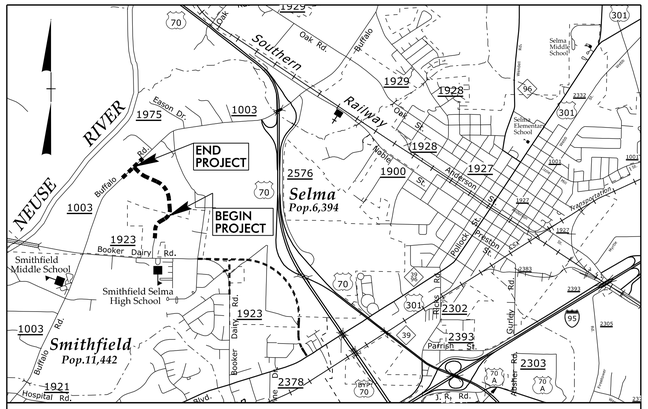

VICINITY MAP

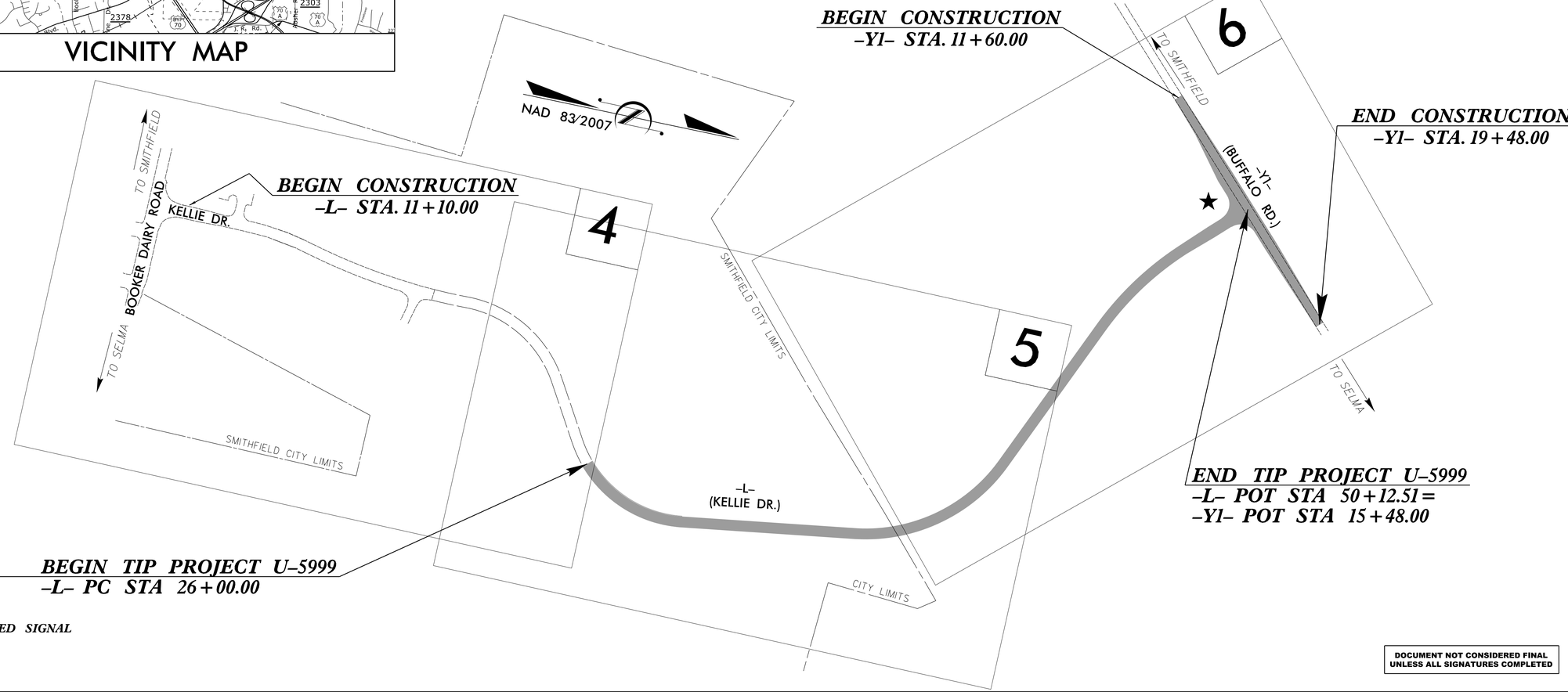

DOCUMENT NOT CONSIDERED FINAL UNLESS ALL SIGNATURES COMPLETED

TIP PROJECT: U-5999

CONTRACT: DD00240

12/27/2017
U:\Roadway\Proj\U5999_Rdy_tsh.dgn
stsmallwood

GRAPHIC SCALES

50 25 0 50 100
PLANS

50 25 0 50 100
PROFILE (HORIZONTAL)

10 5 0 10 20
PROFILE (VERTICAL)

DESIGN DATA

ADT 2018 = 3,600
ADT 2040 = 4,100

V = 30 MPH

FUNC CLASS =
URBAN COLLECTOR
SUBREGIONAL TIER

PROJECT LENGTH

LENGTH OF ROADWAY TIP PROJECT U-5999 = 0.457 MILES

Prepared In the Office of:

Stantec
Stantec Consulting Services Inc.
801 Jones Franklin Road Suite 300
Raleigh, NC 27606
Tel. (919) 851-6866 Fax. (919) 851-7024 www.stantec.com License No. F-0672

MI ENGINEERING
1011 SCHAUB DRIVE, SUITE 100
RALEIGH, NC 27606
(919) 851-6606
FIRM PE NUMBER : P-0671

for the North Carolina Department of Transportation

2018 STANDARD SPECIFICATIONS	STANTEC CONTACT
RIGHT OF WAY DATE: August 18, 2017(Partial)	STEVE SMALLWOOD, PE PROJECT ENGINEER
RIGHT OF WAY DATE: November 27, 2017	NCDOT CONTACT:
LETTING DATE: January 23, 2018	MATT CLARKE, PE

HYDRAULICS ENGINEER

NORTH CAROLINA PROFESSIONAL SEAL 18533 ENGINEER ANDREW T. NOTTINGHAM
Andrew T. Nottingham
12/27/2017
SIGNATURE: P.E.

ROADWAY DESIGN ENGINEER

NORTH CAROLINA PROFESSIONAL SEAL 022037 ENGINEER STEPHEN T. SMALLWOOD
Stephen T. Smallwood
12/27/2017
SIGNATURE: P.E.

STATE OF NORTH CAROLINA DEPARTMENT OF TRANSPORTATION

DocuSign Envelope ID: 287B7550-CB21-433A-9725-E97D99796F05

8/17/99

PROJECT REFERENCE NO.	SHEET NO.
U-5999	1-A

ROADWAY DESIGN ENGINEER

NORTH CAROLINA PROFESSIONAL SEAL 022037 ENGINEER STEPHEN L. SMALLWOOD

Stephen L. Smallwood

1/10/2018

DOCUMENT NOT CONSIDERED FINAL UNLESS ALL SIGNATURES COMPLETED

INDEX OF SHEETS

SHEET NUMBER	SHEET
1	TITLE SHEET
1A	INDEX OF SHEETS, GENERAL NOTES, AND LIST OF STANDARD DRAWINGS
1B	CONVENTIONAL SYMBOLS
1C–1 THRU 1C–2	SURVEY CONTROL SHEETS
2A–1 THRU 2A–2	PAVEMENT SCHEDULE AND TYPICAL SECTIONS
3B–1	SUMMARY OF ROADWAY QUANTITIES SUMMARY OF EARTHWORK
3D–1 THRU 3D–2	DRAINAGE SUMMARIES
3G–1	GEOTECHNICAL SUMMARIES
3P–1	PARCEL INDEX SHEETS
4 THRU 6	PLAN SHEETS
7 THRU 8	PROFILE SHEETS
TMP–1	TRANSPORTATION MANAGEMENT PLANS
PMP–1	PAVEMENT MARKING PLANS
EC–1 THRU EC–9	EROSION CONTROL PLANS
SIG. 1.0 THRU SIG. 2.2	SIGNAL PLANS
SIG M2 THRU SIG M8	METAL POLE STANDARDS
MR–01 THRU MR–04	UTILITY MAKE–READY PLANS
SCP–01 THRU SCP–08	SYSTEM COMMUNICATION PLANS
UC–1 THRU UC–4	UTILITY CONSTRUCTION PLANS
UO–1 THRU UO–2	UTILITIES BY OTHERS PLANS
X–1A	CROSS–SECTION EARTHWORK SUMMARY SHEETS
X–1 THRU X–27	CROSS–SECTIONS

2018 ROADWAY ENGLISH STANDARD DRAWINGS

The following Roadway Standards as appear in "Roadway Standard Drawings" Highway Design Branch – N. C. Department of Transportation – Raleigh, N. C., Dated January, 2018 are applicable to this project and by reference hereby are considered a part of these plans:

STD.NO.	TITLE
DIVISION 2 – EARTHWORK	
200.03	Method of Clearing – Method III
225.02	Guide for Grading Subgrade – Secondary and Local
225.04	Method of Obtaining Superelevation – Two Lane Pavement
DIVISION 3 – PIPE CULVERTS	
300.01	Method of Pipe Installation
310.10	Driveway Pipe Construction
DIVISION 5 – SUBGRADE, BASES AND SHOULDERS	
560.01	Method of Shoulder Construction – High Side of Superelevated Curve – Method I
DIVISION 6 – ASPHALT BASES AND PAVEMENTS	
654.01	Pavement Repairs
DIVISION 8 – INCIDENTALS	
806.01	Concrete Right–of–Way Marker
806.02	Granite Right–of–Way Marker
840.00	Concrete Base Pad for Drainage Structures
840.01	Brick Catch Basin – 12" thru 54" Pipe
840.02	Concrete Catch Basin – 12" thru 54" Pipe
840.03	Frame, Grates and Hood – for Use on Standard Catch Basin
840.14	Concrete Drop Inlet – 12" thru 30" Pipe
840.15	Brick Drop Inlet – 12" thru 30" Pipe
840.16	Drop Inlet Frame and Grates – for use with Std. Dwg 840.14 and 840.15
840.31	Concrete Junction Box – 12" thru 66" Pipe
840.32	Brick Junction Box – 12" thru 66" Pipe
840.45	Precast Drainage Structure
840.54	Manhole Frame and Cover
840.66	Drainage Structure Steps
846.01	Concrete Curb, Gutter and Curb & Gutter
848.01	Concrete Sidewalk
848.03	Driveway Turnout – Drop Curb Type
848.04	Street Turnout
848.05	Curb Ramp – Proposed Curb & Gutter
848.06	Curb Ramp – Existing Curb & Gutter
876.02	Guide for Rip Rap at Pipe Outlets

GENERAL NOTES: 2018 SPECIFICATIONS

GRADING AND SURFACING OR RESURFACING AND WIDENING:

THE GRADE LINES SHOWN DENOTE THE FINISHED ELEVATION OF THE PROPOSED SURFACING AT GRADE POINTS SHOWN ON THE TYPICAL SECTIONS. WHERE NO GRADE LINES ARE SHOWN, THE PROFILES SHOWN DENOTE THE TOP ELEVATION OF THE EXISTING PAVEMENT ALONG THE CENTER LINE OF SURVEY ON WHICH THE PROPOSED RESURFACING WILL BE PLACED. GRADE LINES MAY BE ADJUSTED BY THE ENGINEER IN ORDER TO SECURE A PROPER TIE–IN.

CLEARING:

CLEARING ON THIS PROJECT SHALL BE PERFORMED TO THE LIMITS ESTABLISHED BY METHOD III.

SUPERELEVATION:

ALL CURVES ON THIS PROJECT SHALL BE SUPERELEVATED IN ACCORDANCE WITH STD. NO. 225.04 USING THE RATE OF SUPERELEVATION AND RUNOFF SHOWN ON THE PLANS. SUPERELEVATION IS TO BE REVOLVED ABOUT THE GRADE POINTS SHOWN ON THE TYPICAL SECTIONS.

SHOULDER CONSTRUCTION:

ASPHALT, EARTH, AND CONCRETE SHOULDER CONSTRUCTION ON THE HIGH SIDE OF SUPERELEVATED CURVES SHALL BE IN ACCORDANCE WITH STD. NO. 560.01

SIDE ROADS:

THE CONTRACTOR WILL BE REQUIRED TO DO ALL NECESSARY WORK TO PROVIDE SUITABLE CONNECTIONS WITH ALL ROADS, STREETS, AND DRIVES ENTERING THIS PROJECT. THIS WORK WILL BE PAID FOR AT THE CONTRACT UNIT PRICE FOR THE PARTICULAR ITEMS INVOLVED.

SUBSURFACE DRAINS:

SUBSURFACE DRAINS SHALL BE CONSTRUCTED IN ACCORDANCE WITH STD. NO. 815.02 AT LOCATIONS DIRECTED BY THE ENGINEER.

DRIVEWAYS:

DRIVEWAYS SHALL BE CONSTRUCTED IN ACCORDANCE WITH STD. 848.03 AT LOCATIONS SHOWN ON PLANS OR AS DIRECTED BY THE ENGINEER.

TEMPORARY SHORING:

SHORING REQUIRED FOR THE MAINTENANCE OF TRAFFIC WILL BE PAID FOR AS "EXTRA WORK" IN ACCORDANCE WITH SECTION 104–7.

UTILITIES:

UTILITY OWNERS ON THIS PROJECT ARE Town of Smithfield;

Johnston County; Piedmont Natural Gas; Centurylink; Spectrum

ANY RELOCATION OF EXISTING UTILITIES WILL BE ACCOMPLISHED BY OTHERS, EXCEPT AS SHOWN ON THE PLANS.

RIGHT–OF–WAY MARKERS:

ALL RIGHT–OF–WAY MARKERS ON THIS PROJECT SHALL BE PLACED BY CONTRACT.

CURB RAMPS

CURB RAMPS ARE SHOWN ON THE PLANS AT APPROXIMATE LOCATIONS. CONSTRUCT ALL CURB RAMPS ACCORDANCE WITH STD 848.05 and/or 848.06.

1/10/2018
U:\Roadway\Proj\U5999_Rdy_tsh.dgn
cmoz21ngo

12/2/2016

PROJECT REFERENCE NO.	SHEET NO.
U-5999	1-B

STATE OF NORTH CAROLINA, DIVISION OF HIGHWAYS

CONVENTIONAL PLAN SHEET SYMBOLS

Note: Not to Scale

**S.U.E. = Subsurface Utility Engineering*

BOUNDARIES AND PROPERTY:

- State Line
- County Line
- Township Line
- City Line
- Reservation Line
- Property Line
- Existing Iron Pin — EIP
- Computed Property Corner
- Property Monument — ECM
- Parcel/Sequence Number — 123
- Existing Fence Line
- Proposed Woven Wire Fence
- Proposed Chain Link Fence
- Proposed Barbed Wire Fence
- Existing Wetland Boundary — WLB
- Proposed Wetland Boundary — WLB
- Existing Endangered Animal Boundary — EAB
- Existing Endangered Plant Boundary — EPB
- Existing Historic Property Boundary — HPB
- Known Contamination Area: Soil — S
- Potential Contamination Area: Soil — S
- Known Contamination Area: Water — W
- Potential Contamination Area: Water — W
- Contaminated Site: Known or Potential

BUILDINGS AND OTHER CULTURE:

- Gas Pump Vent or U/G Tank Cap
- Sign — S
- Well — W
- Small Mine
- Foundation
- Area Outline
- Cemetery
- Building
- School
- Church
- Dam

HYDROLOGY:

- Stream or Body of Water
- Hydro, Pool or Reservoir
- Jurisdictional Stream — JS
- Buffer Zone 1 — BZ 1
- Buffer Zone 2 — BZ 2
- Flow Arrow
- Disappearing Stream
- Spring
- Wetland
- Proposed Lateral, Tail, Head Ditch — FLOW
- False Sump

RAILROADS:

- Standard Gauge — CSX TRANSPORTATION
- RR Signal Milepost — MILEPOST 35
- Switch — SWITCH
- RR Abandoned
- RR Dismantled

RIGHT OF WAY & PROJECT CONTROL:

- Secondary Horiz and Vert Control Point
- Primary Horiz Control Point
- Primary Horiz and Vert Control Point
- Exist Permanent Easment Pin and Cap
- New Permanent Easement Pin and Cap
- Vertical Benchmark
- Existing Right of Way Marker
- Existing Right of Way Line
- New Right of Way Line — RW
- New Right of Way Line with Pin and Cap — RW
- New Right of Way Line with Concrete or Granite R/W Marker — RW
- New Control of Access Line with Concrete C/A Marker — CA
- Existing Control of Access — CA
- New Control of Access — CA
- Existing Easement Line — E
- New Temporary Construction Easement — E
- New Temporary Drainage Easement — TDE
- New Permanent Drainage Easement — PDE
- New Permanent Drainage / Utility Easement — DUE
- New Permanent Utility Easement — PUE
- New Temporary Utility Easement — TUE
- New Aerial Utility Easement — AUE

ROADS AND RELATED FEATURES:

- Existing Edge of Pavement
- Existing Curb
- Proposed Slope Stakes Cut — C
- Proposed Slope Stakes Fill — F
- Proposed Curb Ramp — CR
- Existing Metal Guardrail
- Proposed Guardrail
- Existing Cable Guiderail
- Proposed Cable Guiderail
- Equality Symbol
- Pavement Removal

VEGETATION:

- Single Tree
- Single Shrub
- Hedge
- Woods Line
- Orchard
- Vineyard — Vineyard

EXISTING STRUCTURES:

MAJOR:

- Bridge, Tunnel or Box Culvert — CONC
- Bridge Wing Wall, Head Wall and End Wall — CONC WW

MINOR:

- Head and End Wall — CONC HW
- Pipe Culvert
- Footbridge
- Drainage Box: Catch Basin, DI or JB — CB
- Paved Ditch Gutter
- Storm Sewer Manhole — S
- Storm Sewer — S

UTILITIES:

POWER:

- Existing Power Pole
- Proposed Power Pole
- Existing Joint Use Pole
- Proposed Joint Use Pole
- Power Manhole — P
- Power Line Tower
- Power Transformer
- U/G Power Cable Hand Hole
- H-Frame Pole
- U/G Power Line LOS B (S.U.E.*) — P
- U/G Power Line LOS C (S.U.E.*) — P
- U/G Power Line LOS D (S.U.E.*) — P

TELEPHONE:

- Existing Telephone Pole
- Proposed Telephone Pole
- Telephone Manhole — T
- Telephone Pedestal — T
- Telephone Cell Tower
- U/G Telephone Cable Hand Hole — HH
- U/G Telephone Cable LOS B (S.U.E.*) — T
- U/G Telephone Cable LOS C (S.U.E.*) — T
- U/G Telephone Cable LOS D (S.U.E.*) — T
- U/G Telephone Conduit LOS B (S.U.E.*) — TC
- U/G Telephone Conduit LOS C (S.U.E.*) — TC
- U/G Telephone Conduit LOS D (S.U.E.*) — TC
- U/G Fiber Optics Cable LOS B (S.U.E.*) — T FO
- U/G Fiber Optics Cable LOS C (S.U.E.*) — T FO
- U/G Fiber Optics Cable LOS D (S.U.E.*) — T FO

WATER:

- Water Manhole — W
- Water Meter
- Water Valve
- Water Hydrant
- U/G Water Line LOS B (S.U.E*) — W
- U/G Water Line LOS C (S.U.E*) — W
- U/G Water Line LOS D (S.U.E*) — W
- Above Ground Water Line — A/G Water

TV:

- TV Pedestal — C
- TV Tower
- U/G TV Cable Hand Hole — HH
- U/G TV Cable LOS B (S.U.E.*) — TV
- U/G TV Cable LOS C (S.U.E.*) — TV
- U/G TV Cable LOS D (S.U.E.*) — TV
- U/G Fiber Optic Cable LOS B (S.U.E.*) — TV FO
- U/G Fiber Optic Cable LOS C (S.U.E.*) — TV FO
- U/G Fiber Optic Cable LOS D (S.U.E.*) — TV FO

GAS:

- Gas Valve
- Gas Meter
- U/G Gas Line LOS B (S.U.E.*) — G
- U/G Gas Line LOS C (S.U.E.*) — G
- U/G Gas Line LOS D (S.U.E.*) — G
- Above Ground Gas Line — A/G Gas

SANITARY SEWER:

- Sanitary Sewer Manhole
- Sanitary Sewer Cleanout
- U/G Sanitary Sewer Line — SS
- Above Ground Sanitary Sewer — A/G Sanitary Sewer
- SS Forced Main Line LOS B (S.U.E.*) — FSS
- SS Forced Main Line LOS C (S.U.E.*) — FSS
- SS Forced Main Line LOS D (S.U.E.*) — FSS

MISCELLANEOUS:

- Utility Pole
- Utility Pole with Base
- Utility Located Object
- Utility Traffic Signal Box — S
- Utility Unknown U/G Line LOS B (S.U.E.*) — ?UTL
- U/G Tank; Water, Gas, Oil
- Underground Storage Tank, Approx. Loc. — UST
- A/G Tank; Water, Gas, Oil
- Geoenvironmental Boring
- U/G Test Hole LOS A (S.U.E.*)
- Abandoned According to Utility Records — AATUR
- End of Information — E.O.I.

PROJECT REFERENCE NO.	SHEET NO.
U-5999	1C-1
Location and Surveys	

SURVEY CONTROL SHEET U-5999

W/ EXISTING CENTERLINE ALIGNMENTS PRIOR TO CONSTRUCTION

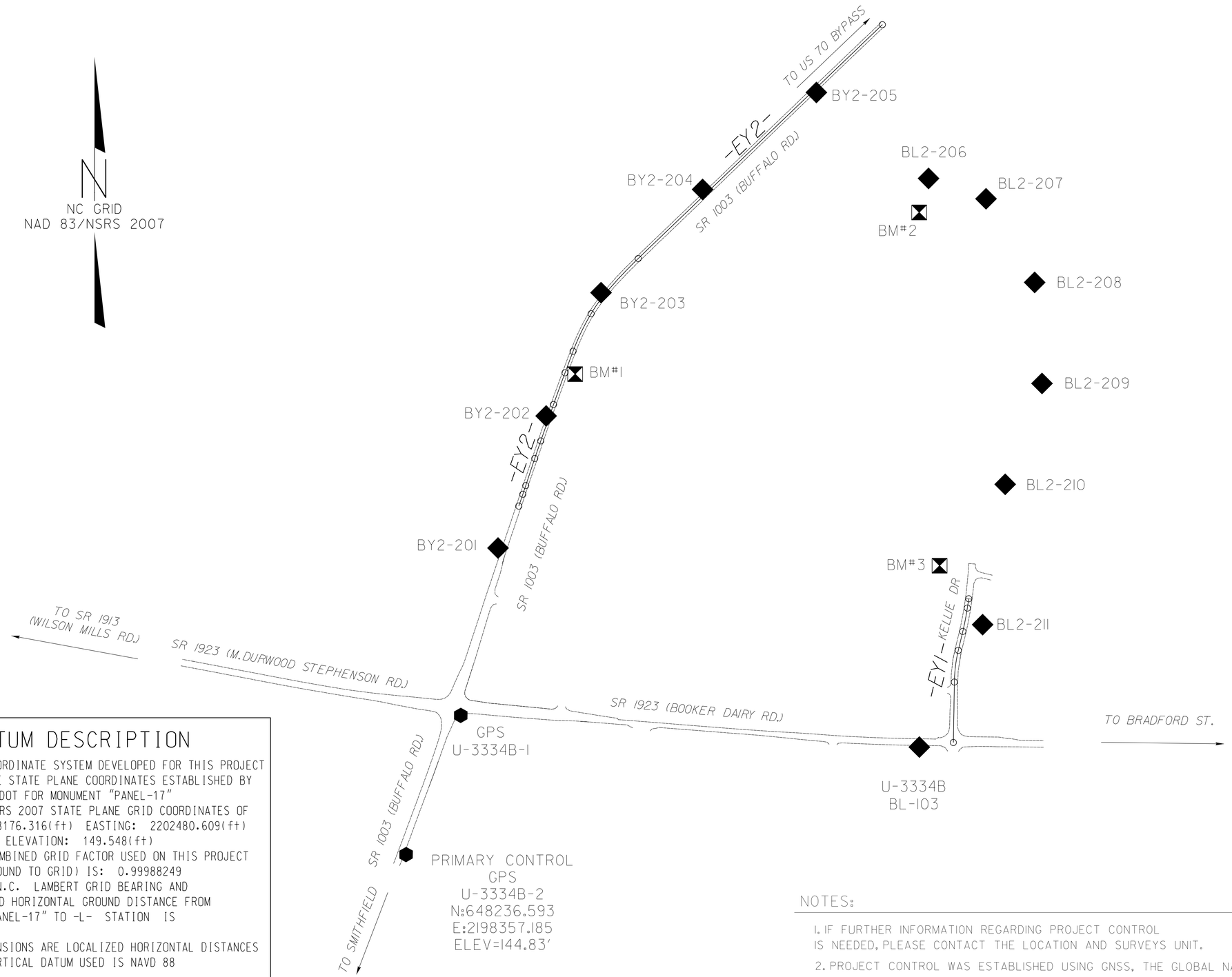

DATUM DESCRIPTION

THE LOCALIZED COORDINATE SYSTEM DEVELOPED FOR THIS PROJECT IS BASED ON THE STATE PLANE COORDINATES ESTABLISHED BY NCDOT FOR MONUMENT "PANEL-17"
WITH NAD 83/NSRS 2007 STATE PLANE GRID COORDINATES OF
NORTHING: 648176.316(ft) EASTING: 2202480.609(ft)
ELEVATION: 149.548(ft)
THE AVERAGE COMBINED GRID FACTOR USED ON THIS PROJECT (GROUND TO GRID) IS: 0.99988249
THE N.C. LAMBERT GRID BEARING AND LOCALIZED HORIZONTAL GROUND DISTANCE FROM "PANEL-17" TO -L- STATION IS

ALL LINEAR DIMENSIONS ARE LOCALIZED HORIZONTAL DISTANCES
VERTICAL DATUM USED IS NAVD 88

NOTES:

1. IF FURTHER INFORMATION REGARDING PROJECT CONTROL IS NEEDED, PLEASE CONTACT THE LOCATION AND SURVEYS UNIT.
2. PROJECT CONTROL WAS ESTABLISHED USING GNSS, THE GLOBAL NAVIGATION SATELLITE SYSTEM.
3. NOTE: DRAWING NOT TO SCALE

REVISIONS

6/2/99

12/27/2017
U:\Projects\Proj\u5999_ls_lc-1.dgn
stsmith1wad

PROJECT REFERENCE NO.	SHEET NO.
U-5999	1C-2
Location and Surveys	

SURVEY CONTROL SHEET U-5999

W/ EXISTING CENTERLINE ALIGNMENTS PRIOR TO CONSTRUCTION

BASELINE DATA

BL2

POINT	DESC.	NORTH	EAST	ELEVATION
2005	U5999 BL2-205	651908.1897	2200333.0178	145.64
206	U5999 BL2-206	651493.9611	2200873.0845	144.58
207	U5999 BL2-207	651395.8991	2201150.0842	144.41
208	U5999 BL2-208	650992.9694	2201384.3120	142.66
209	U5999 BL2-209	650506.1031	2201419.4613	143.89
210	U5999 BL2-210	650020.3537	2201242.2202	149.87
211	U5999 BL2-211	649344.0796	2201133.5015	155.06
103	U3334B BL-103	648754.2166	2200828.9495	155.16

BY2

POINT	DESC.	NORTH	EAST	ELEVATION
1	U3334B-1	648906.9860	2198620.3750	143.04
201	U5999 BY2-201	649713.2176	2198799.8429	145.36
202	U5999 BY2-202	650349.6570	2199031.4110	146.83
203	U5999 BY2-203	650943.5858	2199295.7314	149.55
204	U5999 BY2-204	651440.9271	2199784.9213	145.73
205	U5999 BY2-205	651908.1897	2200333.0178	145.64

BENCHMARK DATA

BM1 ELEVATION = 148.87
N 650551 E 2199171
BENCH NAIL IN 18" PINE

BM2 ELEVATION = 146.10
N 651330 E 2200828
BENCH NAIL IN 12" OAK

BM3 ELEVATION = 153.00
N 649628 E 2200927
BENCH NAIL IN 18"PINE

ALIGNMENT DATA

EY1

POINT	N	E	BEARING	DIST	DELTA	D	L	T	R
POT	649469.091	2201067.178							
LINE			S 08°43'09.2" W	45.55					
PC	649424.068	2201060.273							
CURVE			S 11°00'36.6" W	114.52	04°34'54.7"(RT)	04°00'00.0"	114.55	57.30	1432.39
PT	649311.660	2201038.403							
LINE			S 13°18'03.9" W	93.60					
PC	649220.572	2201016.868							
CURVE			S 07°07'45.5" W	154.00	12°20'36.7"(LT)	08°00'00.0"	154.29	77.45	716.20
PT	649067.767	2200997.756							
LINE			S 00°57'27.2" W	291.38					
POT	648776.431	2200992.887							

EY2

POINT	N	E	BEARING	DIST	DELTA	D	L	T	R
POT	649915.443	2198899.953							
LINE			N 18°50'58.2" E	60.29					
PC	649972.503	2198919.433							
CURVE			N 18°37'42.0" E	44.23	00°26'32.4"(LT)	01°00'00.0"	44.23	22.12	5729.58
PT	650014.420	2198933.562							
LINE			N 18°24'25.7" E	137.68					
PC	650145.053	2198977.037							
CURVE			N 18°51'13.7" E	89.33	00°53'36.0"(RT)	01°00'00.0"	89.33	44.67	5729.58
PT	650229.592	2199005.905							
LINE			N 19°18'01.7" E	185.94					
PC	650405.083	2199067.362							
CURVE			N 19°54'33.0" E	162.31	01°13'02.6"(RT)	00°45'00.0"	162.32	81.16	7639.44
PT	650557.697	2199122.635							
LINE			N 20°31'04.3" E	110.76					
PC	650661.430	2199161.456							
CURVE			N 25°37'27.8" E	200.65	10°12'47.1"(RT)	05°05'00.1"	200.91	100.72	1127.13
PCC	650842.342	2199248.230							
CURVE			N 35°30'05.8" E	124.99	09°32'28.8"(RT)	07°37'30.4"	125.13	62.71	751.41
PCC	650944.093	2199320.812							
CURVE			N 43°14'54.9" E	225.35	05°57'09.4"(RT)	02°38'25.3"	225.45	112.83	2170.00
PT	651108.233	2199475.212							
LINE			N 46°13'29.6" E	1628.51					
POT	652234.883	2200651.094							

NOTES:

1. IF FURTHER INFORMATION REGARDING PROJECT CONTROL IS NEEDED, PLEASE CONTACT THE LOCATION AND SURVEYS UNIT.

2. PROJECT CONTROL WAS ESTABLISHED USING GNSS, THE GLOBAL NAVIGATION SATELLITE SYSTEM.

REVISIONS

6/2/99

12/27/2017
L:\Projects\Proj\u5999_ls_1c-2.dgn
stsmallwood

DocuSign Envelope ID: FCA75EB4-DBDB-4E0A-A4F5-A6999C855DF1

Stantec
Stantec Consulting Services Inc.
801 Jones Franklin Road
Suite 300
Raleigh, NC 27606
Tel. (919) 851-6866
Fax. (919) 851-7024
www.stantec.com
License No. F-0672

PROJECT REFERENCE NO.	SHEET NO.
U-5999	2A-1
ROADWAY DESIGN ENGINEER	PAVEMENT DESIGN ENGINEER

NORTH CAROLINA PROFESSIONAL SEAL 022037 ENGINEER STEPHEN T. SMALLWOOD

DocuSigned by: Stephen T. Smallwood

DOCUMENT NOT CONSIDERED FINAL UNLESS ALL SIGNATURES COMPLETED

P A V E M E N T S C H E D U L E

C1	PROP. APPROX. 3″ ASPHALT CONCRETE SURFACE COURSE TYPE S9.5B, AT AN AVERAGE RATE OF 168 LBS. PER SQ. YD. IN EACH OF TWO LAYERS.	E2	PROP. VAR. DEPTH ASPHALT CONCRETE BASE COURSE, TYPE B25.0B, AT AN AVERAGE RATE OF 114 LBS. PER SQ. YD. PER 1″ DEPTH. TO BE PLACED IN LAYERS NOT LESS THAN 3″ IN DEPTH OR GREATER THAN 5½″ IN DEPTH.
C2	PROP. APPROX. 1½″ ASPHALT CONCRETE SURFACE COURSE, TYPE S9.5B, AT AN AVERAGE RATE OF 168 LBS. PER SQ. YD.	R	2′-6″ CONCRETE CURB AND GUTTER.
C3	PROP. VAR. DEPTH ASPHALT CONCRETE SURFACE COURSE, TYPE S9.5B, AT AN AVERAGE RATE OF 112 LBS. PER SQ. YD. PER 1″ DEPTH. TO BE PLACED IN LAYERS NOT TO EXCEED 2″ IN DEPTH.	S	4″ CONCRETE SIDEWALK.
D1	PROP. APPROX. 4″ ASPHALT CONCRETE INTERMEDIATE COURSE, TYPE I19.0B, AT AN AVERAGE RATE OF 456 LBS. PER SQ. YD.	T	EARTH MATERIAL.
D2	PROP. VAR. DEPTH ASPHALT CONCRETE INTERMEDIATE COURSE, TYPE I19.0B, AT AN AVERAGE RATE OF 114 LBS. PER SQ. YD. PER 1″ DEPTH, TO BE PLACED IN LAYERS NOT LESS THAN 2½″ IN DEPTH OR GREATER THAN 4″ IN DEPTH.	U	EXISTING PAVEMENT.
E1	PROP. APPROX. 4″ ASPHALT CONCRETE BASE COURSE, TYPE B25.0B, AT AN AVERAGE RATE OF 456 LBS. PER SQ. YD.	W	VARIABLE DEPTH ASPHALT PAVEMENT (SEE STANDARD WEDGING DETAIL).

NOTE: PAVEMENT EDGE SLOPES ARE 1:1 UNLESS SHOWN OTHERWISE.

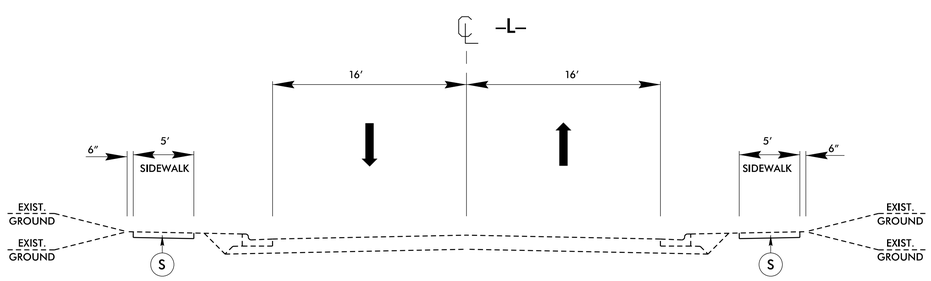

TYPICAL SECTION NO. 1
STA. 11+10.00 TO STA. 26+00.00

NOTE: SEE PLANS FOR EXACT LOCATION OF SIDEWALK

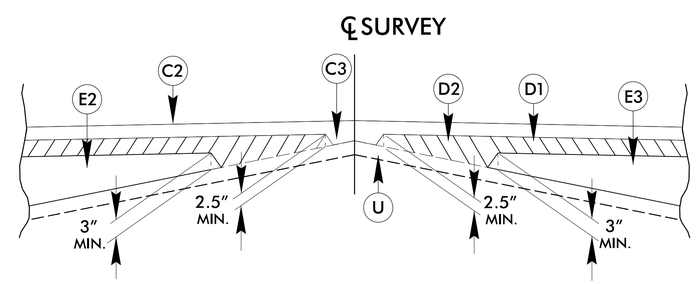

Detail W2 Showing Method of Wedging

12/27/2017
U:\U5999\Proj\U5999_Rdy_typ.dgn
stsmallwood

DocuSign Envelope ID: FCA75EB4-DBDB-4E0A-A4F5-A6999C855DF1

6/2/99

Stantec
Stantec Consulting Services Inc.
801 Jones Franklin Road
Suite 300
Raleigh, NC 27606
Tel. (919) 851-6866
Fax. (919) 851-7024
www.stantec.com
License No. F-0672

PROJECT REFERENCE NO.	SHEET NO.
U-5999	2A-2
ROADWAY DESIGN ENGINEER	PAVEMENT DESIGN ENGINEER

NORTH CAROLINA PROFESSIONAL ENGINEER SEAL 022037 STEPHEN T. SMALLWOOD

Stephen T. Smallwood

DOCUMENT NOT CONSIDERED FINAL UNLESS ALL SIGNATURES COMPLETED

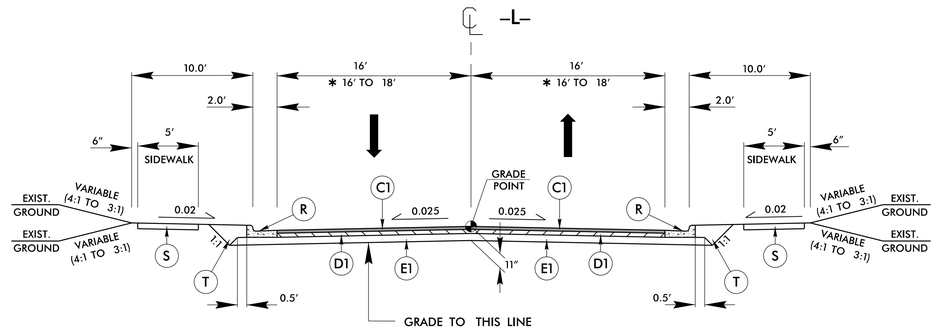

TYPICAL SECTION NO. 2

STA. 26+00.00 TO STA. 47+82.51

*STA. 47+82.51 TO STA. 48+82.51

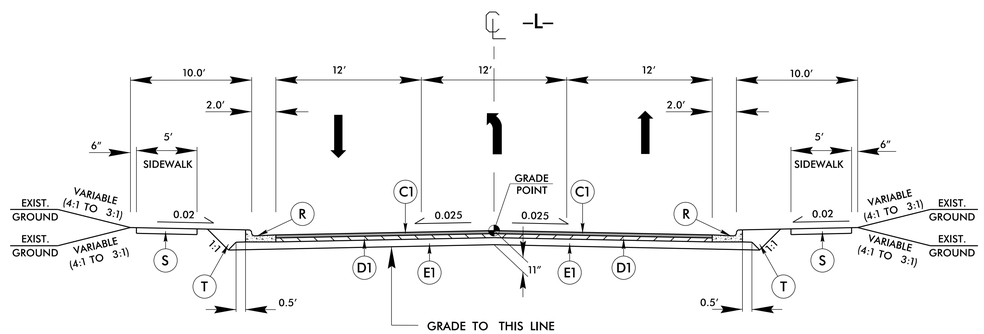

TYPICAL SECTION NO. 3

STA. 48+82.51 TO STA. 49+82.51

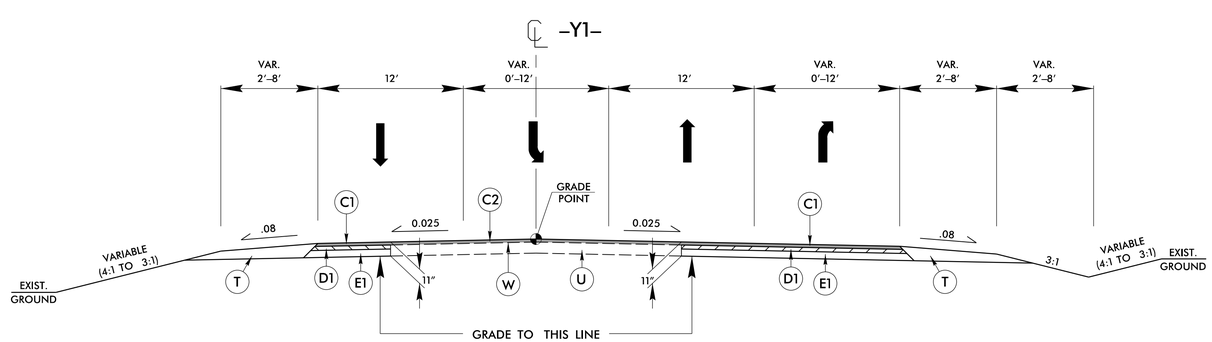

TYPICAL SECTION NO. 4

STA. 11+60.00 TO STA. 19+48.00

PRELIMINARY PAVEMENT SCHEDULE

C1	3″ S9.5B	R	2′-6″ C & G
C2	1.5″ S9.5B	S	SIDEWALK
C3	VAR. S9.5B	T	EARTH MATERIAL
D1	4″ I19.0B	U	EXISTING PAVEMENT
D2	VAR. I19.0B	W	WEDGING (SEE DETAIL ON SHT. 2A-1)
E1	4″ B25.0B	NOTE: PAVEMENT EDGE SLOPES ARE 1:1 UNLESS SHOWN OTHERWISE.	
E2	VAR. B25.0B		

12/27/2017
U:\Projects\Pro_U\U5999_Rdy_tp.dgn
stevenwilson

SUMMARY OF EARTHWORK

IN CUBIC YARDS

STATION	STATION	UNCL. EXCAV.	UNDERCUT	UNSUIT. UNCLASS.	EMBANK. +%	BORROW	WASTE
-L- STA. 26+00	-L- STA. 49+82.51	416	1,087	192	31,581	31,587	1279
-Y1- RT STA. 11+60	-Y1- RT STA. 19+48	517			63		455
SUBTOTALS:		932	1,087	192	31,643	31,356	1,733
-Y1- LT STA. 11+60	-Y1- LT STA. 19+48	95			284	189	
SUBTOTALS:		95			284	189	
TOTALS:		1,027	1,087	192	31,927	31,546	1,733
MATERIAL FOR SHOULDER CONSTRUCTION					425	425	
LOSS DUE TO CLEARING & GRUBBING		2900				-2900	
ADDITIONAL UNDERCUT			1,800		2,250	2,250	1,800
WASTE IN LIEU OF BORROW						0	
PROJECT TOTALS:		3,927	2,887	192	34,602	31,321	3,533
EST. 5% TO REPLACE TOP SOIL ON BORROW PIT						1,566	
GRAND TOTALS:		3,927	2,887	192	34,602	32,877	3,533
SAY:		4,500	3,000			33,500	

EST. DDE 31 CY
EST. SELECT GRANULAR MATERIAL 200 CY

Earthwork quantities are calculated by the Roadway Design Unit. These earthwork quantities are based in part on subsurface data provided by the Geotechnical Engineering Unit.

NOTE:
APPROXIMATE QUANTITIES ONLY. UNCLASSIFIED EXCAVATION, FINE GRADING, CLEARING & GRUBBING, WILL BE PAID FOR AT THE CONTRACT LUMP SUM PRICE FOR GRADING.

12/06/07
12/27/2007
12:07:09 PM
C:\Projects\U5999_rdy_summary_3B1.dgn
stamlewood

SMALLWOODST-LT

COMPUTED BY:	Linda Johns, PE	DATE:	12/15/2017
CHECKED BY:	Andrew Nottingham, PE	DATE:	12/15/2017

NORTH CAROLINA DEPARTMENT OF TRANSPORTATION
DIVISION OF HIGHWAYS

PROJECT NO.	SHEET NO.
U-5999	3D-1

Note: Invert Elevations indicated are for Bid Purposes only and shall not be used for project construction stakeout. See "Standard Specifications For Roads and Structures, Section 300-5".

LIST OF PIPES, ENDWALLS, ETC. (FOR PIPES 48 INCHES & UNDER)

| LINE & STATION / SIZE / THICKNESS OR GAUGE | OFFSET | STRUCTURE NUMBER FROM | STRUCTURE NUMBER TO | TOP ELEVATION FT. | INVERT ELEVATION FT. | INVERT ELEVATION FT. | MINIMUM REQUIRED SLOPE % | Drainage Pipe (RCP, CSP, CAAP, HDPE, or PVC) 18 | 24 | 30 | 36 | 42 | 48 | 54 | 60 | 66 | 72 | 78 | 84 | DO NOT USE RCP | DO NOT USE CSP | DO NOT USE CAAP | DO NOT USE HDPE | DO NOT USE PVC | C. S. PIPE 12 .064 | 15 .064 | 18 .064 | 24 .064 | 30 .079 | 36 .079 | 42 .109 | 48 .109 | 54 | 60 | 66 | 72 | 78 | 84 | R. C. PIPE CLASS III 12 | 15 | 30 | 18 | R. C. PIPE CLASS IV 18 | R. C. PIPE CLASS V 18 | 15" SIDE DRAIN PIPE | QUANTITIES FOR DRAINAGE STRUCTUR NOTE: TOTAL LIN. FT. FOR PAY QUANTITY SHALL BE A + (1.3 X B) A 0' THRU 5' EACH | 5' THRU 10' LIN. FT. | C.B. STD. 840.03 OR STD. 840.02 | FRAME, GRATES, AND HOOD STD. 840.03 GRATE TYPE E | F | G | CONCRETE TRANSITIONAL SECTION D.I. STD. 852.04 OR STD. 852.06 | C.B. STD. 852.05 | OPEN THROAT C.B. STD. 840.04 OR STD. 840.05 | CONCRETE BRIDGE APPROACH D.I. STD. 840.13 | D.I. STD. 840.14 OR STD. 840.15 | D.I. FRAME AND GRATES STD. 840.16 | D.I. TYPE "A" STD. 840.17 OR STD. 840.26 | G.D.I. TYPE "B" STD. 840.18 OR STD. 840.27 | G.D.I. TYPE "D" STD. 840.19 OR STD. 840.28 | G.D.I. (W.S. FLAT) FRAME WITH GRATE STD. 840.2 | G.D.I. (W.S. FLAT) FRAME W/ 2 GRATES STD. 840.2 | G.D.I. (W.S. SAG) FRAME W/ GRATE STD. 840.22 | G.D.I. (W.S. SAG) FRAME W/ 2 GRATES STD. 840.2 | G.D.I. (N.S. SAG) FRAME W/ GRATE STD. 840.24 | G.D.I. (N.S. SAG) FRAME W/ 2 GRATES STD. 840.2 | G.D.I. (N.S. FLAT) FRAME W/ GRATE STD. 840.29 | G.D.I. (N.S. FLAT) FRAME W/ 2 GRATES STD. 840.2 | DRIVEWAY D.I. STD. 840.30 | FRAME W/ GRATE FOR DRIVEWAY STD. 840.30 | J.B. STD. 840.31 OR STD. 840.32 | ANGLED VANE GRATES AND FRAMES STD. 840.3 | T.B.J.B. STD. 840.34 | T.B.D.I. STD. 840.35 | T.B.D.I. FOR STEEL GRATES STD. 840.36 | STEEL FRAME WITH TWO GRATES STD. 840.37 | TEMP STEEL PLATE COVER MASONRY DRAINAG | ##" SPRING BOX PIPE | SPRING BOX STD. 840.41 | M.H. FRAME AND COVER STD. 850.54 | PIPE REMOVAL LIN. FT. | REMARKS |
|---|---|---|---

SMALLWOODST-LT

COMPUTED BY:	Linda Johns, PE	DATE:	12/15/2017
CHECKED BY:	Andrew Nottingham, PE	DATE:	12/15/2017

NORTH CAROLINA DEPARTMENT OF TRANSPORTATION
DIVISION OF HIGHWAYS

PROJECT NO.	SHEET NO.
U-5999	3D-2

Note: Invert Elevations indicated are for Bid Purposes only and shall not be used for project construction stakeout. See "Standard Specifications For Roads and Structures, Section 300-5".

LIST OF PIPES, ENDWALLS, ETC. (FOR PIPES 48 INCHES & UNDER)

| LINE & STATION / SIZE / THICKNESS OR GAUGE | OFFSET | STRUCTURE NUMBER FROM | STRUCTURE NUMBER TO | TOP ELEVATION FT. | INVERT ELEVATION FT. | INVERT ELEVATION FT. | MINIMUM REQUIRED SLOPE % | Drainage Pipe (RCP, CSP, CAAP, HDPE, or PVC) 18 | 24 | 30 | 36 | 42 | 48 | 54 | 60 | 66 | 72 | 78 | 84 | DO NOT USE RCP | DO NOT USE CSP | DO NOT USE CAAP | DO NOT USE HDPE | DO NOT USE PVC | C. S. PIPE 12 .064 | 15 .064 | 18 .064 | 24 .064 | 30 .079 | | | 36 .079 | | | 42 .109 | 48 .109 | 54 | 60 | 66 | 72 | 78 | 84 | R. C. PIPE CLASS III 12 | 15 | 30 | R. C. PIPE CLASS IV 18 | R. C. PIPE CLASS V 18 | 15" SIDE DRAIN PIPE | QUANTITIES FOR DRAINAGE STRUCTUR NOTE: TOTAL LIN. FT. FOR PAY QUANTITY SHALL BE A + (1.3 X B) A 0' THRU 5' EACH | A 5' THRU 10' LIN. FT. | C.B. STD. 840.03 OR STD. 840.02 | FRAME, GRATES, AND HOOD STD. 840.03 GRATE TYPE E | F | G | CONCRETE TRANSITIONAL SECTION D.I. STD. 852.06 OR STD. 852.04 | C.B. STD. 852.05 | OPEN THROAT C.B. STD. 840.04 OR STD. 840.05 | CONCRETE BRIDGE APPROACH D.I. STD. 840.13 | D.I. STD. 840.14 OR STD. 840.15 | D.I. FRAME AND GRATES STD. 840.16 | G.D.I. TYPE "A" STD. 840.17 OR STD. 840.26 | G.D.I. TYPE "B" STD. 840.18 OR STD. 840.27 | G.D.I. TYPE "D" STD. 840.19 OR STD. 840.28 | G.D.I. (W.S. FLAT) FRAME WITH GRATE STD. 840.2 | G.D.I. (W.S. FLAT) FRAME W/ 2 GRATES STD. 840.2 | G.D.I. (W.S. SAG) FRAME W/ GRATE STD. 840.22 | G.D.I. (W.S. SAG) FRAME W/ 2 GRATES STD. 840.2 | G.D.I. (N.S. SAG) FRAME W/ GRATE STD. 840.24 | G.D.I. (N.S. SAG) FRAME W/ 2 GRATES STD. 840.2 | G.D.I. (N.S. FLAT) FRAME W/ GRATE STD. 840.29 | G.D.I. (N.S. FLAT) FRAME W/ 2 GRATES STD. 840.2 | DRIVEWAY D.I. STD. 840.30 | FRAME W/ GRATE FOR DRIVEWAY STD. 840.30 | J.B. STD. 840.31 OR STD. 840.32 | ANGLED VANE GRATES AND FRAMES STD. 840.3 | T.B.J.B. STD. 840.34 | T.B.D.I. STD. 840.35 | T.B.D.I. FOR STEEL GRATES STD. 840.36 | STEEL FRAME WITH TWO GRATES STD. 840.37 | TEMP STEEL PLATE COVER MASONRY DRAINAG | ##" SPRING BOX PIPE | SPRING BOX STD. 840.41 | M.H. FRAME AND COVER STD. 850.54 | PIPE REMOVAL LIN. FT. | REMARKS |
|---|---|---|---

COMPUTED BY: GEOTECH	DATE: 12/11/2017
CHECKED BY: _____	DATE: _____

PROJECT NO.	SHEET NO.
U-5999	3G-1

STATE OF NORTH CAROLINA
DIVISION OF HIGHWAYS

SUMMARY OF SUBSURFACE DRAINAGE

LINE	Station	Station	Location LT/RT/CL	Drain Type* UD/BD/SD	LF
CONTINGENCY				SD	1000
				TOTAL LF:	1000

*UD = Underdrain
*BD = Blind Drain
*SD = Subsurface Drain

SUMMARY OF AGGREGATE SUBGRADE/STABILIZATION

LINE	Station	Station	Aggregate Type* ASU/AST	Aggregate Thickness INCHES	Shallow Undercut CY	Class IV Subgrade Stabilization TONS	Geotextile for Soil Stabilization SY	Stabilizer Aggregate TONS	Class IV Aggregate Stabilization TONS
-L-	29+17	29+67	AST	6				100	
CONTINGENCY			ASU	18	250	500	500		
			TOTAL CY/TONS/SY:		250	500**	500**	100	0

*ASU = Aggregate Subgrade
*AST = Aggregate Stabilization
**Total tons of "Class IV Subgrade Stabilization" and total square yards of "Geotextile for Soil Stabilization" are only the estimated quantities for ASU/AST and may only represent a portion of the subgrade stabilization and geotextile quantities shown in the Item Sheets of the Proposal.

PROJ. REFERENCE NO.	SHEET NO.
U-5999	3P-1

STATE OF NORTH CAROLINA
DIVISION OF HIGHWAYS

PARCEL INDEX SHEET

PARCEL No.	SHEET No.	PROPERTY OWNER NAME
1	4, 5, 6	Wolfpack Investors, LLC
2	6	Kellie Stephenson
3	6	Ralph Stancil
4	6	Romey Langston
5	6	Callie Jones

PARCEL No.	SHEET No.	PROPERTY OWNER NAME

DocuSign Envelope ID: FB43C1FC-10BE-46F7-8F3D-F805A0DCDE6B

MI ENGINEERING
1011 SCHAUB DRIVE, SUITE 100
RALEIGH, NC 27606
(919) 851-6606
FIRM PE NUMBER : P-0671

Stantec
Stantec Consulting Services Inc.
801 Jones Franklin Road
Suite 300
Raleigh, NC 27606
Tel. (919) 851-6866
Fax. (919) 851-7024
www.stantec.com
License No. F-0672

PROJECT REFERENCE NO.	SHEET NO.
U-5999	4
R/W SHEET NO.	

ROADWAY DESIGN ENGINEER: NORTH CAROLINA PROFESSIONAL SEAL 032037 ENGINEER STEPHEN T. SMALLWOOD

HYDRAULICS ENGINEER: NORTH CAROLINA PROFESSIONAL SEAL 18533 ENGINEER ANDREW T. NOTTINGHAM

DOCUMENT NOT CONSIDERED FINAL UNLESS ALL SIGNATURES COMPLETED

NAD 83/2007

REVISIONS

8/17/99

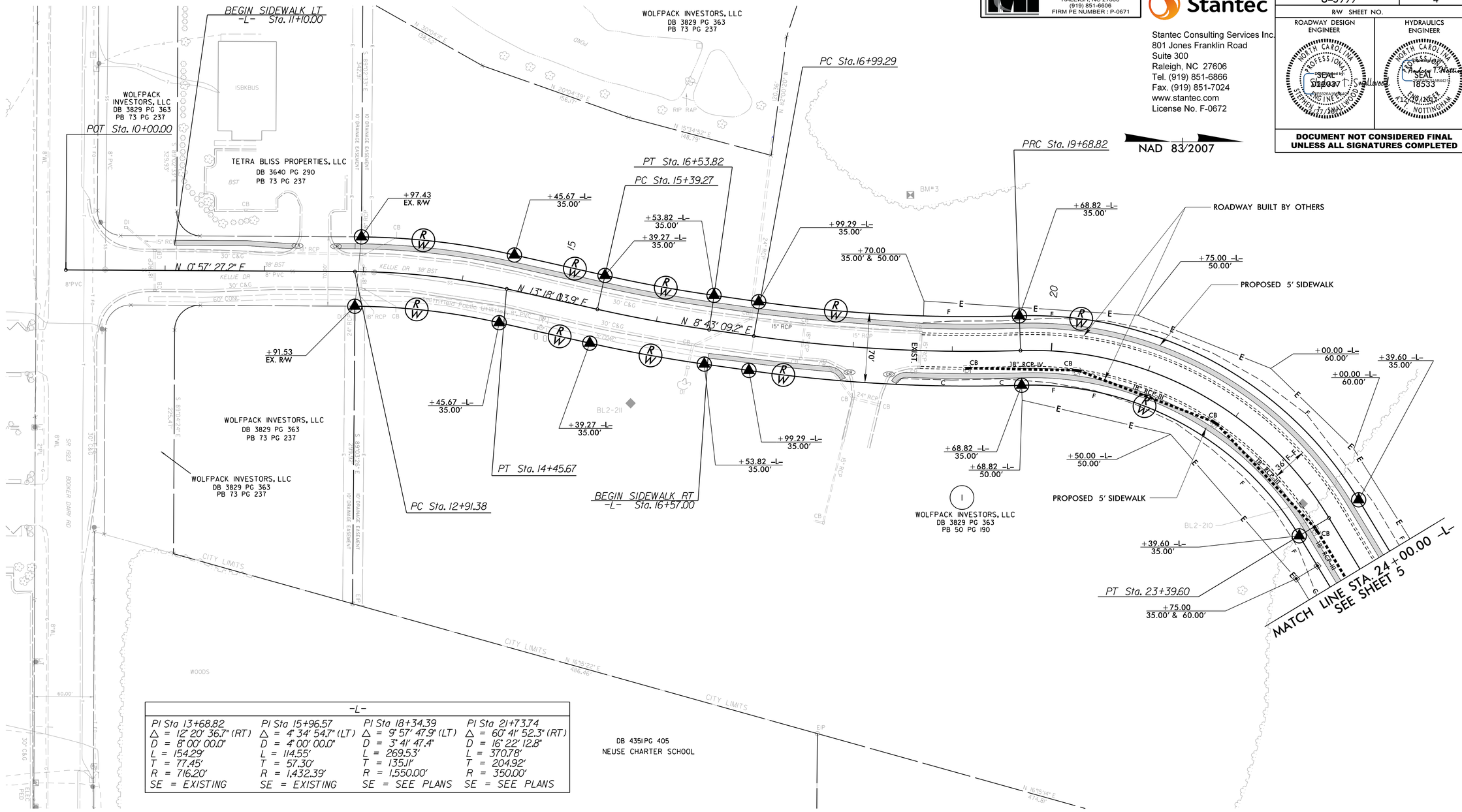

-L-			
PI Sta 13+68.82	PI Sta 15+96.57	PI Sta 18+34.39	PI Sta 21+73.74
Δ = 12° 20' 36.7" (RT)	Δ = 4° 34' 54.7" (LT)	Δ = 9° 57' 47.9" (LT)	Δ = 60° 41' 52.3" (RT)
D = 8° 00' 00.0"	D = 4° 00' 00.0"	D = 3° 41' 47.4"	D = 16° 22' 12.8"
L = 154.29'	L = 114.55'	L = 269.53'	L = 370.78'
T = 77.45'	T = 57.30'	T = 135.11'	T = 204.92'
R = 716.20'	R = 1,432.39'	R = 1,550.00'	R = 350.00'
SE = EXISTING	SE = EXISTING	SE = SEE PLANS	SE = SEE PLANS

12/27/2017
U:\Roadway\Proj\U5999_Rdy_psh4.dgn
stsmallwood

SEE SHEETS 7 & 8 FOR -L- PROFILE

DocuSign Envelope ID: 2319658E-5023-4CAD-8047-C71DAC2A3C38

MI ENGINEERING
1011 SCHAUB DRIVE, SUITE 100
RALEIGH, NC 27606
(919) 851-6606
FIRM PE NUMBER : P-0671

Stantec
Stantec Consulting Services Inc.
801 Jones Franklin Road
Suite 300
Raleigh, NC 27606
Tel. (919) 851-6866
Fax. (919) 851-7024
www.stantec.com
License No. F-0672

PROJECT REFERENCE NO.	SHEET NO.
U-5999	5
R/W SHEET NO.	

ROADWAY DESIGN ENGINEER: NORTH CAROLINA PROFESSIONAL ENGINEER SEAL 022037 STEPHEN T. SMALLWOOD

HYDRAULICS ENGINEER: NORTH CAROLINA PROFESSIONAL ENGINEER SEAL 18533 ANDREW T. NOTTINGHAM

DOCUMENT NOT CONSIDERED FINAL UNLESS ALL SIGNATURES COMPLETED

REVISIONS

8/17/99

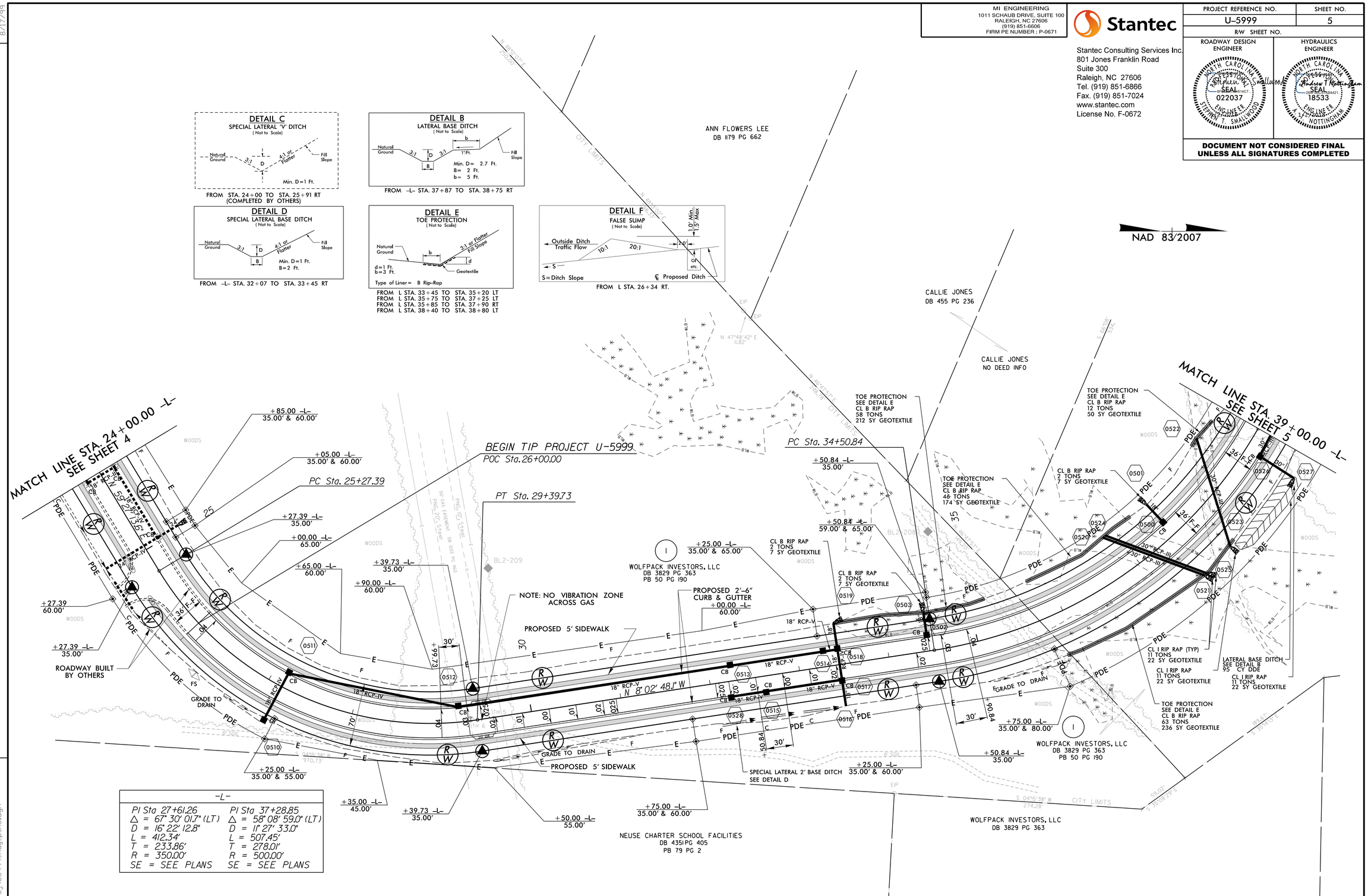

-L-	
PI Sta 27+61.26	PI Sta 37+28.85
△ = 67° 30' 01.7" (LT)	△ = 58° 08' 59.0" (LT)
D = 16° 22' 12.8"	D = 11° 27' 33.0"
L = 412.34'	L = 507.45'
T = 233.86'	T = 278.01'
R = 350.00'	R = 500.00'
SE = SEE PLANS	SE = SEE PLANS

SEE SHEETS 7 & 8 FOR -L- PROFILE

1/2/2018
U:\Roadway\Proj\U5999_Rdy_psh5.dgn

DocuSign Envelope ID: 0DDB475F-5FF9-4CE1-AA6E-7BE7A75B000B

PROJECT REFERENCE NO.	SHEET NO.
U-5999	6
R/W SHEET NO.	

ROADWAY DESIGN ENGINEER
NORTH CAROLINA PROFESSIONAL SEAL 022037 ENGINEER STEPHEN T. SMALLWOOD
Designed by: Stephen T. Smallwood
Checked by:

HYDRAULICS ENGINEER
NORTH CAROLINA PROFESSIONAL SEAL 18533 ENGINEER ANDREW J. NOTTINGHAM
Designed by: Andrew J. Nottingham
Checked by:

DOCUMENT NOT CONSIDERED FINAL UNLESS ALL SIGNATURES COMPLETED

MI ENGINEERING
1011 SCHAUB DRIVE, SUITE 100
RALEIGH, NC 27606
(919) 851-6606
FIRM PE NUMBER : P-0671

Stantec
Stantec Consulting Services Inc
801 Jones Franklin Road
Suite 300
Raleigh, NC 27606
Tel. (919) 851-6866
Fax. (919) 851-7024
www.stantec.com
License No. F-0672

REVISIONS

8/17/99

DETAIL A
STANDARD BASE DITCH
(Not to Scale)

Y1 STA. 16+20 LT, L=20', S=1.4%

DETAIL F
SPECIAL CUT DITCH
(Not to Scale)

FROM Y1 STA. 14+50 TO STA. 14+68 RT.
FROM Y1 STA. 16+33 TO STA. 16+50 RT.
FROM Y1 STA. 15+50 TO STA. 16+50 LT.

-L-	
PI Sta 37+28.85	PI Sta 46+28.81
△ = 58° 08' 59.0" (LT)	△ = 22° 25' 16.7" (RT)
D = 11° 27' 33.0"	D = 6° 21' 58.3"
L = 507.45'	L = 352.19'
T = 278.01'	T = 178.38'
R = 500.00'	R = 900.00'
SE = SEE PLANS	SE = SEE PLANS

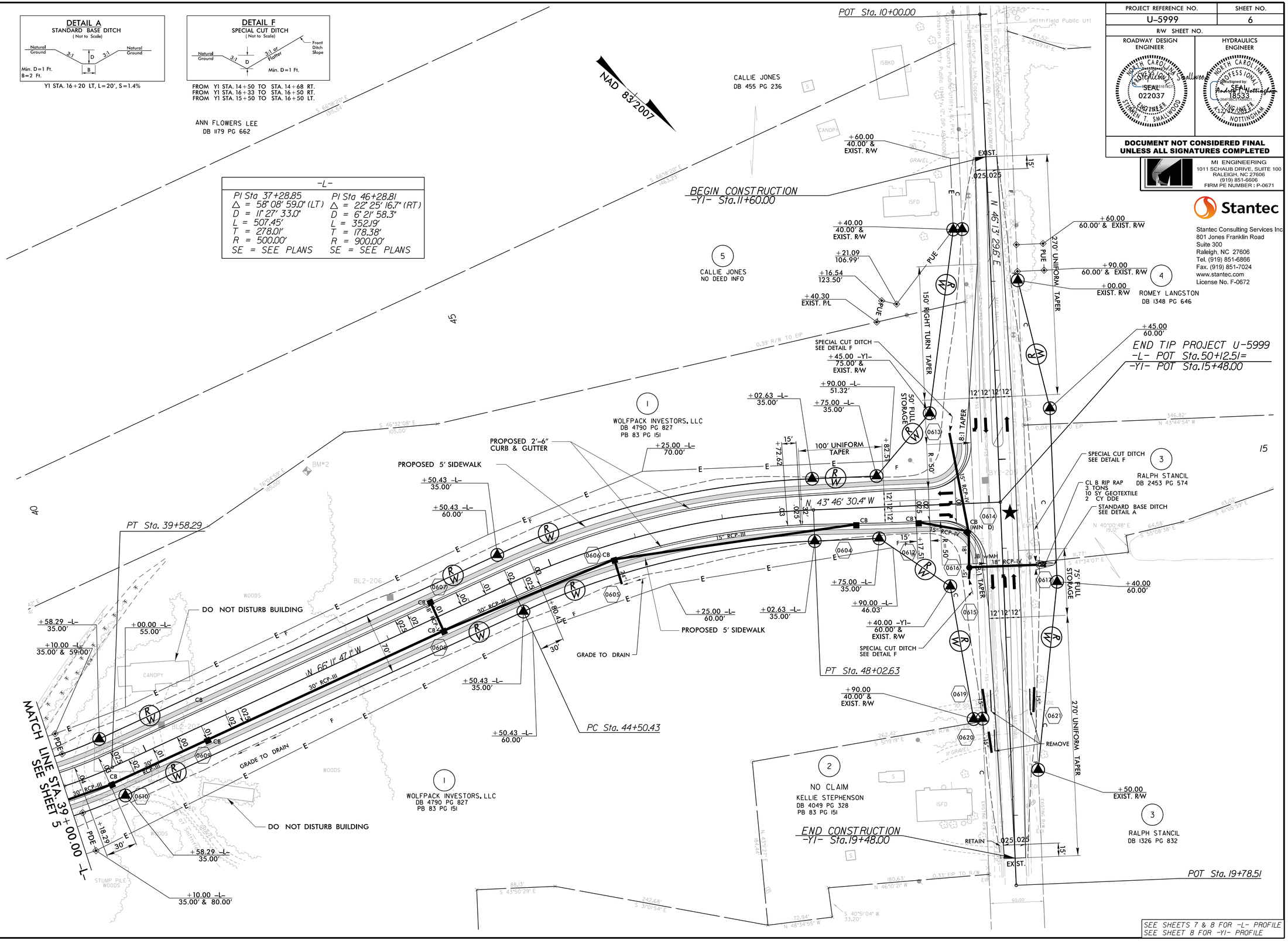

SEE SHEETS 7 & 8 FOR -L- PROFILE
SEE SHEET 8 FOR -Y1- PROFILE

12/27/2017
U:\Roadway\Proj\U5999_Rdy_psh6.dgn
stsmallwood

DocuSign Envelope ID: FB43C1FC-10BE-46F7-8F3D-F805A0DCDE6B

5/28/99

Stantec
Stantec Consulting Services Inc.
801 Jones Franklin Road
Suite 300
Raleigh, NC 27606
Tel. (919) 851-6866
Fax. (919) 851-7024
www.stantec.com
License No. F-0672

PROJECT REFERENCE NO.	SHEET NO.
U-5999	7

ROADWAY DESIGN ENGINEER
NORTH CAROLINA PROFESSIONAL SEAL 022037 ENGINEER STEPHEN T. SMALLWOOD
DocuSigned by: Stephen T. Smallwood
C8F5BC57A5A421...
6/15/2021 | 8:26:57 AM EDT

HYDRAULICS ENGINEER
NORTH CAROLINA PROFESSIONAL SEAL 18533 ENGINEER A. T. NOTTINGHAM
DocuSigned by: Austin T. Nottingham
C8F5BC57A5A421...
6/15/2021 | 8:26:57 AM EDT

DOCUMENT NOT CONSIDERED FINAL UNLESS ALL SIGNATURES COMPLETED

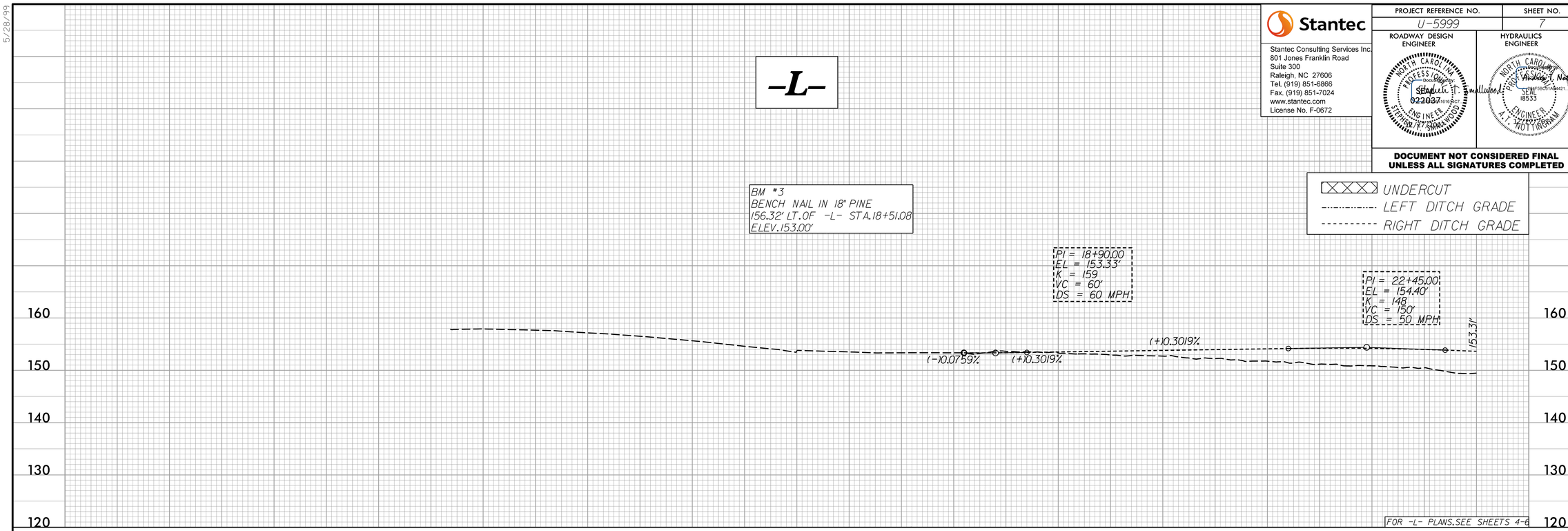

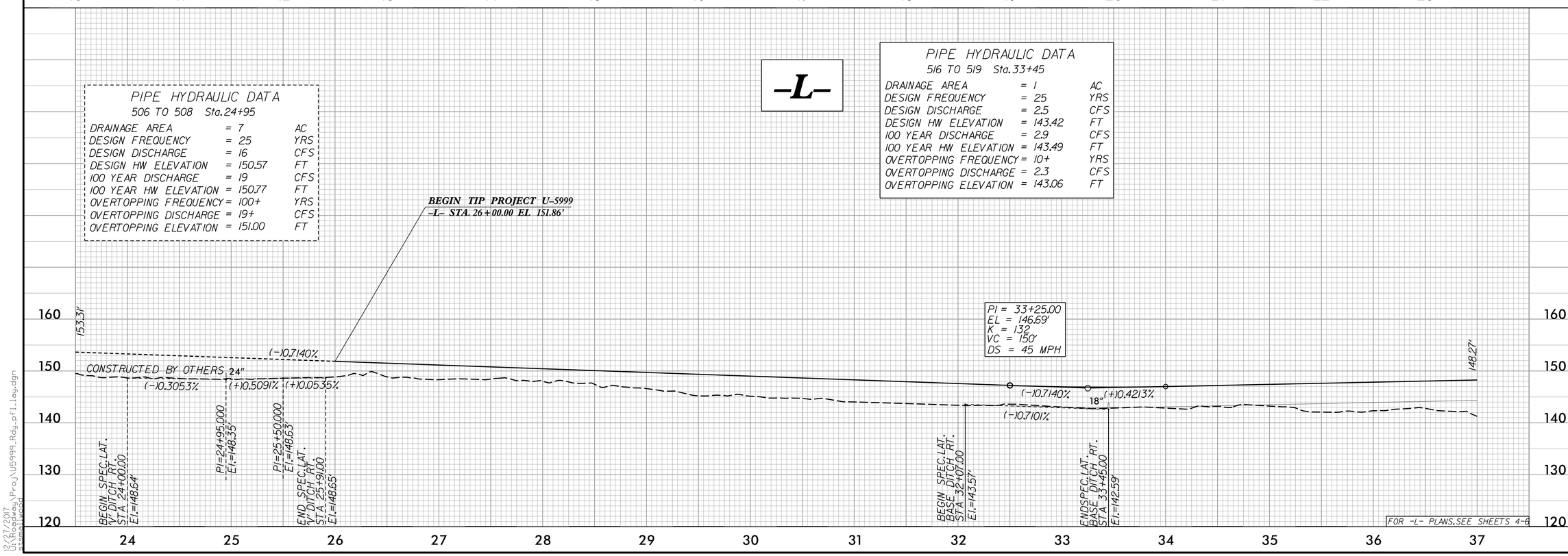

12/27/2017
U:\Projects\Roadway\Proj\U5999_Rdy_pfl_leg.dgn
stamallwood

DocuSign Envelope ID: FB43C1FC-10BE-46F7-8F3D-F805A0DCDE6B

5/28/99

PROJECT REFERENCE NO.	SHEET NO.
U-5999	8

Stantec
Stantec Consulting Services Inc.
801 Jones Franklin Road
Suite 300
Raleigh, NC 27606
Tel. (919) 851-6866
Fax. (919) 851-7024
www.stantec.com
License No. F-0672

ROADWAY DESIGN ENGINEER
NORTH CAROLINA PROFESSIONAL SEAL 022037 ENGINEER STEPHEN T. SMALLWOOD
Stephen T. Smallwood
12/27/2017

HYDRAULICS ENGINEER
NORTH CAROLINA PROFESSIONAL SEAL 030161 ENGINEER A. TATHAM BURTON III
DocuSigned by: Tatham Burton
12/27/2017

DOCUMENT NOT CONSIDERED FINAL UNLESS ALL SIGNATURES COMPLETED

UNDERCUT
LEFT DITCH GRADE
RIGHT DITCH GRADE

PIPE HYDRAULIC DATA
520 TO 521 Sta. 37+15

DRAINAGE AREA	= 40	AC
DESIGN FREQUENCY	= 25	YRS
DESIGN DISCHARGE	= 47	CFS
DESIGN HW ELEVATION	= 143.27	FT
100 YEAR DISCHARGE	= 80	CFS
100 YEAR HW ELEVATION	= 143.62	FT
OVERTOPPING FREQUENCY	= 500+	YRS
OVERTOPPING DISCHARGE	= 100	CFS
OVERTOPPING ELEVATION	= 147.09	FT

PIPE HYDRAULIC DATA
524 TO 525 Sta. 37+18

DRAINAGE AREA	= 49	AC
DESIGN FREQUENCY	= 25	YRS
DESIGN DISCHARGE	= 65	CFS
DESIGN HW ELEVATION	= 143.27	FT
100 YEAR DISCHARGE	= 80	CFS
100 YEAR HW ELEVATION	= 143.62	FT
OVERTOPPING FREQUENCY	= 500+	YRS
OVERTOPPING DISCHARGE	= 100	CFS
OVERTOPPING ELEVATION	= 147.09	FT

PIPE HYDRAULIC DATA
522 TO 523 Sta. 38+13

DRAINAGE AREA	= 49	AC
DESIGN FREQUENCY	= 25	YRS
DESIGN DISCHARGE	= 65	CFS
DESIGN HW ELEVATION	= 143.27	FT
100 YEAR DISCHARGE	= 80	CFS
100 YEAR HW ELEVATION	= 143.62	FT
OVERTOPPING FREQUENCY	= 500+	YRS
OVERTOPPING DISCHARGE	= 30	CFS
OVERTOPPING ELEVATION	= 147.09	FT

-L-

BM #2
BENCH NAIL IN 12" OAK
210.01' LT. OF -L- STA. 42+96.21
ELEV. 146.10'

FOR -Y1- PLANS, SEE SHEET 6
FOR -L- PLANS, SEE SHEETS 4-6

-Y1-

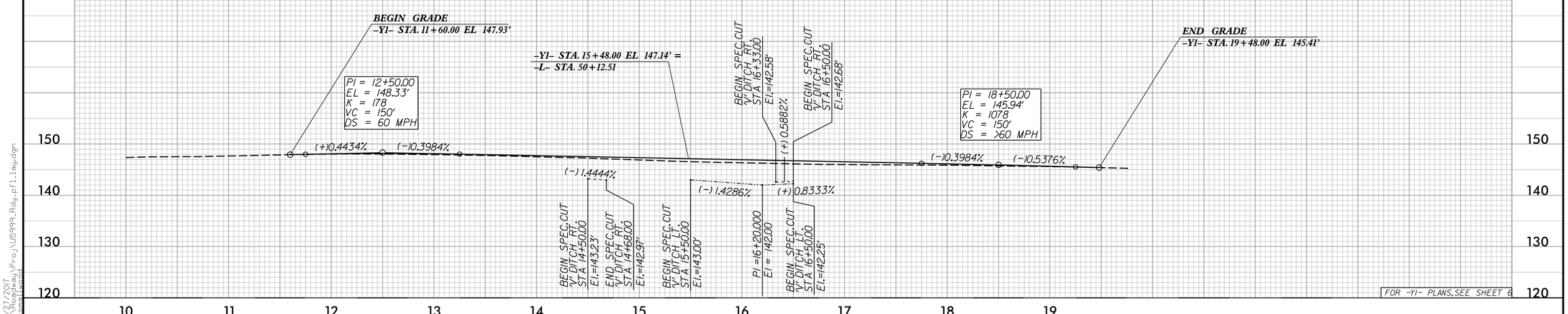

FOR -Y1- PLANS, SEE SHEET 6

12/27/2017
U:\Projects\Roadway\Proj\U5999_Rdy_pfl_leu.dgn
stmallwood

DocuSign Envelope ID: D39467CC-5C6E-4FD7-A525-04F9F615B59C

STATE OF NORTH CAROLINA
DIVISION OF HIGHWAYS

TRANSPORTATION MANAGEMENT PLAN

JOHNSTON COUNTY

DIVISION 4

KELLIE DRIVE FROM BOOKER DAIRY ROAD (SR 1923) TO BUFFALO ROAD (SR 1003)

GENERAL NOTES

LANE AND SHOULDER CLOSURE REQUIREMENTS

A) REMOVE LANE CLOSURE DEVICES FROM THE LANE WHEN WORK IS NOT BEING PERFORMED BEHIND THE LANE CLOSURE OR WHEN A LANE CLOSURE IS NO LONGER NEEDED OR AS DIRECTED BY THE ENGINEER.

B) WHEN PERSONNEL AND/OR EQUIPMENT ARE WORKING WITHIN 15 FT OF AN OPEN TRAVEL LANE, CLOSE THE NEAREST OPEN SHOULDER USING ROADWAY STANDARD DRAWING NO. 1101.04 UNLESS THE WORK AREA IS PROTECTED BY BARRIER OR GUARDRAIL OR A LANE CLOSURE IS INSTALLED.

C) WHEN PERSONNEL AND/OR EQUIPMENT ARE WORKING ON THE SHOULDER ADJACENT TO AN UNDIVIDED FACILITY AND WITHIN 5 FT OF AN OPEN TRAVEL LANE, CLOSE THE NEAREST OPEN TRAVEL LANE USING ROADWAY STANDARD DRAWING NO. 1101.02 UNLESS THE WORK AREA IS PROTECTED BY BARRIER OR GUARDRAIL.

WHEN PERSONNEL AND/OR EQUIPMENT ARE WORKING ON THE SHOULDER ADJACENT TO A DIVIDED FACILITY AND WITHIN 10 FT OF AN OPEN TRAVEL LANE, CLOSE THE NEAREST OPEN TRAVEL LANE USING ROADWAY STANDARD DRAWING NO. 1101.02 UNLESS THE WORK AREA IS PROTECTED BY BARRIER OR GUARDRAIL.

D) WHEN PERSONNEL AND/OR EQUIPMENT ARE WORKING WITHIN A LANE OF TRAVEL OF AN UNDIVIDED OR DIVIDED FACILITY, CLOSE THE LANE ACCORDING TO THE TRANSPORTATION MANAGEMENT PLANS, ROADWAY STANDARD DRAWINGS, OR AS DIRECTED BY THE ENGINEER. CONDUCT THE WORK SO THAT ALL PERSONNEL AND/OR EQUIPMENT REMAIN WITHIN THE CLOSED TRAVEL LANE.

E) DO NOT WORK SIMULTANEOUSLY WITHIN 15 FT ON BOTH SIDES OF AN OPEN TRAVELWAY, RAMP, OR LOOP WITHIN THE SAME LOCATION UNLESS PROTECTED WITH GUARDRAIL OR BARRIER.

TRAFFIC PATTERN ALTERATIONS

F) NOTIFY THE ENGINEER TWENTY ONE (21) CALENDAR DAYS PRIOR TO ANY TRAFFIC PATTERN ALTERATION.

PAVEMENT EDGE DROP OFF REQUIREMENTS

G) BACKFILL AT A 6:1 SLOPE UP TO THE EDGE AND ELEVATION OF EXISTING PAVEMENT IN AREAS ADJACENT TO AN OPEN TRAVEL LANE THAT HAS A DROP-OFF AS FOLLOWS:

BACKFILL DROP-OFFS THAT EXCEED 2 INCHES ON ROADWAYS WITH POSTED SPEED LIMITS OF 45 MPH OR GREATER.

BACKFILL DROP-OFFS THAT EXCEED 3 INCHES ON ROADWAYS WITH POSTED SPEED LIMITS LESS THAN 45 MPH.

BACKFILL WITH SUITABLE COMPACTED MATERIAL, AS APPROVED BY THE ENGINEER, AT NO EXPENSE TO THE DEPARTMENT.

H) DO NOT EXCEED A DIFFERENCE OF 2 INCHES IN ELEVATION BETWEEN OPEN LANES OF TRAFFIC FOR NOMINAL LIFTS OF 1.5 INCHES. INSTALL ADVANCE WARNING "UNEVEN LANES" SIGNS (W8-11) 500 FT IN ADVANCE AND A MINIMUM OF ONCE EVERY HALF MILE THROUGHOUT THE UNEVEN AREA.

PAVEMENT MARKINGS AND MARKERS

I) INSTALL TEMPORARY PAVEMENT MARKINGS AND TEMPORARY PAVEMENT MARKERS ON INTERIM LAYERS OF PAVEMENT AS FOLLOWS:

ROAD NAME	MARKING	MARKER
ALL ROADS	PAINT	TEMPORARY RAISED

J) PLACE ONE APPLICATION OF PAINT FOR TEMPORARY TRAFFIC PATTERNS. PLACE A SECOND APPLICATION OF PAINT SIX (6) MONTHS AFTER THE INITIAL APPLICATION AND EVERY SIX MONTHS AS DIRECTED BY THE ENGINEER.

K) TIE PROPOSED PAVEMENT MARKING LINES TO EXISTING PAVEMENT MARKING LINES.

L) REMOVE/REPLACE ANY CONFLICTING/DAMAGED PAVEMENT MARKINGS AND MARKERS BY THE END OF EACH DAY'S OPERATION.

MISCELLANEOUS

M) MAINTAIN VEHICULAR ACCESS TO ALL DRIVEWAYS DURING THE LIFE OF THE CONTRACT, UNLESS OTHERWISE NOTED IN THE PHASING OR DIRECTED BY THE ENGINEER. USE INCIDENTAL STONE WHEN NECESSARY.

WORK ZONE SAFETY & MOBILITY
"from the MOUNTAINS to the COAST"

N.C.D.O.T. DIVISION 4
CONTACT: MATT CLARKE, P.E.

DIVISION OF HIGHWAYS · STATE OF NORTH CAROLINA · DEPARTMENT OF TRANSPORTATION · WORK ZONE TRAFFIC CONTROL

PHASING

STEP 1: USING RSD 1101.01, PLACE WORK ZONE ADVANCE WARNING SIGNS.

STEP 2: USING RSD 1101.02 (SHEET 1 OF 14) AS NECESSARY, CONSTRUCT THE FOLLOWING:

- KELLIE DRIVE (-L-) UP TO BUT NOT INCLUDING THE FINAL LAYER OF SURFACE COURSE FROM STA. 16+68.75 TO STA. 50+12.51

- BUFFALO ROAD (-Y1-) UP TO THE EDGE AND ELEVATION OF EXISTING PAVEMENT FROM STA. 11+60 TO STA. 19+48

STEP 3: USING RSD 1101.02 (SHEET 1 OF 14), PAVE -Y1- UP TO BUT NOT INCLUDING THE FINAL LAYER OF SURFACE COURSE. PLACE TEMPORARY MARKINGS IN THE FINAL PATTERN AS SHOWN ON THE PAVEMENT MARKING PLAN.

STEP 4: USING RSD 1101.02 (SHEET 1 OF 14), PLACE THE FINAL LAYER OF SURFACE COURSE ON -L- AND -Y1- AND PLACE FINAL MARKINGS AS SHOWN ON THE PAVEMENT MARKING PLAN.

STEP 5: REMOVE ALL TRAFFIC CONTROL DEVICES AND OPEN THE PROJECT TO THE FINAL TRAFFIC PATTERN.

ROADWAY STANDARD DRAWINGS

THE FOLLOWING ROADWAY STANDARDS AS APPEAR IN "ROADWAY STANDARD DRAWINGS" - PROJECT SERVICES UNIT - N.C. DEPARTMENT OF TRANSPORTATION - RALEIGH, N.C., DATED JANUARY 2012 ARE APPLICABLE TO THIS PROJECT AND BY REFERENCE HEREBY ARE CONSIDERED A PART OF THESE PLANS:

STD. NO.	TITLE
1101.01	WORK ZONE ADVANCE WARNING SIGNS
1101.02	TEMPORARY LANE CLOSURES
1101.04	TEMPORARY SHOULDER CLOSURES
1101.05	WORK ZONE VEHICLE ACCESSES
1101.11	TRAFFIC CONTROL DESIGN TABLES
1110.01	STATIONARY WORK ZONE SIGNS
1110.02	PORTABLE WORK ZONE SIGNS
1115.01	FLASHING ARROW BOARDS
1130.01	DRUMS
1135.01	CONES
1145.01	BARRICADES
1150.01	FLAGGING DEVICES
1180.01	SKINNY - DRUM
1205.01	PAVEMENT MARKINGS - LINE TYPES AND OFFSETS
1205.02	PAVEMENT MARKINGS - TWO LANE AND MULTILANE ROADWAYS
1261.01	GUARDRAIL AND BARRIER DELINEATORS - INSTALLATION SPACING
1261.02	GUARDRAIL AND BARRIER DELINEATORS - TYPES AND MOUNTING
1262.01	GUARDRAIL END DELINEATION
1264.01	OBJECT MARKERS - TYPES
1264.02	OBJECT MARKERS - INSTALLATION

Stantec
Stantec Consulting Services Inc.
801 Jones Franklin Road, Suite 300
Raleigh, NC 27606
Tel. 919.851.6866
Fax. 919.851.7024
www.stantec.com
License No. F-0672

DocuSigned by: J.W. Woolard Jr. 313C926F00C4...
NORTH CAROLINA PROFESSIONAL SEAL 19862 ENGINEER J.W. WOOLARD JR.
1/3/2018

DOCUMENT NOT CONSIDERED FINAL UNLESS ALL SIGNATURES COMPLETED

SHEET NO.
TMP-1

TIP PROJECT: U-5999

1/3/2018
U:\Traffic\Transportation Management Plan\TCP\PLAN SHEETS\U-5999_TMP_01_TITLE.dgn
angood

STATE OF NORTH CAROLINA
DIVISION OF HIGHWAYS

TRANSPORTATION MANAGEMENT PLAN

JOHNSTON COUNTY

DIVISION 4

KELLIE DRIVE FROM BOOKER DAIRY ROAD (SR 1923) TO BUFFALO ROAD (SR 1003)

GENERAL NOTES

LANE AND SHOULDER CLOSURE REQUIREMENTS

A) REMOVE LANE CLOSURE DEVICES FROM THE LANE WHEN WORK IS NOT BEING PERFORMED BEHIND THE LANE CLOSURE OR WHEN A LANE CLOSURE IS NO LONGER NEEDED OR AS DIRECTED BY THE ENGINEER.

B) WHEN PERSONNEL AND/OR EQUIPMENT ARE WORKING WITHIN 15 FT OF AN OPEN TRAVEL LANE, CLOSE THE NEAREST OPEN SHOULDER USING ROADWAY STANDARD DRAWING NO. 1101.04 UNLESS THE WORK AREA IS PROTECTED BY BARRIER OR GUARDRAIL OR A LANE CLOSURE IS INSTALLED.

C) WHEN PERSONNEL AND/OR EQUIPMENT ARE WORKING ON THE SHOULDER ADJACENT TO AN UNDIVIDED FACILITY AND WITHIN 5 FT OF AN OPEN TRAVEL LANE, CLOSE THE NEAREST OPEN TRAVEL LANE USING ROADWAY STANDARD DRAWING NO. 1101.02 UNLESS THE WORK AREA IS PROTECTED BY BARRIER OR GUARDRAIL.

WHEN PERSONNEL AND/OR EQUIPMENT ARE WORKING ON THE SHOULDER ADJACENT TO A DIVIDED FACILITY AND WITHIN 10 FT OF AN OPEN TRAVEL LANE, CLOSE THE NEAREST OPEN TRAVEL LANE USING ROADWAY STANDARD DRAWING NO. 1101.02 UNLESS THE WORK AREA IS PROTECTED BY BARRIER OR GUARDRAIL.

D) WHEN PERSONNEL AND/OR EQUIPMENT ARE WORKING WITHIN A LANE OF TRAVEL OF AN UNDIVIDED OR DIVIDED FACILITY, CLOSE THE LANE ACCORDING TO THE TRANSPORTATION MANAGEMENT PLANS, ROADWAY STANDARD DRAWINGS, OR AS DIRECTED BY THE ENGINEER. CONDUCT THE WORK SO THAT ALL PERSONNEL AND/OR EQUIPMENT REMAIN WITHIN THE CLOSED TRAVEL LANE.

E) DO NOT WORK SIMULTANEOUSLY WITHIN 15 FT ON BOTH SIDES OF AN OPEN TRAVELWAY, RAMP, OR LOOP WITHIN THE SAME LOCATION UNLESS PROTECTED WITH GUARDRAIL OR BARRIER.

TRAFFIC PATTERN ALTERATIONS

F) NOTIFY THE ENGINEER TWENTY ONE (21) CALENDAR DAYS PRIOR TO ANY TRAFFIC PATTERN ALTERATION.

PAVEMENT EDGE DROP OFF REQUIREMENTS

G) BACKFILL AT A 6:1 SLOPE UP TO THE EDGE AND ELEVATION OF EXISTING PAVEMENT IN AREAS ADJACENT TO AN OPEN TRAVEL LANE THAT HAS A DROP-OFF AS FOLLOWS:

BACKFILL DROP-OFFS THAT EXCEED 2 INCHES ON ROADWAYS WITH POSTED SPEED LIMITS OF 45 MPH OR GREATER.

BACKFILL DROP-OFFS THAT EXCEED 3 INCHES ON ROADWAYS WITH POSTED SPEED LIMITS LESS THAN 45 MPH.

BACKFILL WITH SUITABLE COMPACTED MATERIAL, AS APPROVED BY THE ENGINEER, AT NO EXPENSE TO THE DEPARTMENT.

H) DO NOT EXCEED A DIFFERENCE OF 2 INCHES IN ELEVATION BETWEEN OPEN LANES OF TRAFFIC FOR NOMINAL LIFTS OF 1.5 INCHES. INSTALL ADVANCE WARNING "UNEVEN LANES" SIGNS (W8-11) 500 FT IN ADVANCE AND A MINIMUM OF ONCE EVERY HALF MILE THROUGHOUT THE UNEVEN AREA.

PAVEMENT MARKINGS AND MARKERS

I) INSTALL TEMPORARY PAVEMENT MARKINGS AND TEMPORARY PAVEMENT MARKERS ON INTERIM LAYERS OF PAVEMENT AS FOLLOWS:

ROAD NAME	MARKING	MARKER
ALL ROADS	PAINT	TEMPORARY RAISED

J) PLACE ONE APPLICATION OF PAINT FOR TEMPORARY TRAFFIC PATTERNS. PLACE A SECOND APPLICATION OF PAINT SIX (6) MONTHS AFTER THE INITIAL APPLICATION AND EVERY SIX MONTHS AS DIRECTED BY THE ENGINEER.

K) TIE PROPOSED PAVEMENT MARKING LINES TO EXISTING PAVEMENT MARKING LINES.

L) REMOVE/REPLACE ANY CONFLICTING/DAMAGED PAVEMENT MARKINGS AND MARKERS BY THE END OF EACH DAY'S OPERATION.

MISCELLANEOUS

M) MAINTAIN VEHICULAR ACCESS TO ALL DRIVEWAYS DURING THE LIFE OF THE CONTRACT, UNLESS OTHERWISE NOTED IN THE PHASING OR DIRECTED BY THE ENGINEER. USE INCIDENTAL STONE WHEN NECESSARY.

WORK ZONE SAFETY & MOBILITY
"from the MOUNTAINS to the COAST"

N.C.D.O.T. DIVISION 4
CONTACT: MATT CLARKE, P.E.

DIVISION OF HIGHWAYS · STATE OF NORTH CAROLINA · DEPARTMENT OF TRANSPORTATION · WORK ZONE TRAFFIC CONTROL

PHASING

STEP 1: USING RSD 1101.01, PLACE WORK ZONE ADVANCE WARNING SIGNS.

STEP 2: USING RSD 1101.02 (SHEET 1 OF 14) AS NECESSARY, CONSTRUCT THE FOLLOWING:

- KELLIE DRIVE (-L-) UP TO BUT NOT INCLUDING THE FINAL LAYER OF SURFACE COURSE FROM STA. 16+68.75 TO STA. 50+12.51

- BUFFALO ROAD (-Y1-) UP TO THE EDGE AND ELEVATION OF EXISTING PAVEMENT FROM STA. 11+60 TO STA. 19+48

STEP 3: USING RSD 1101.02 (SHEET 1 OF 14), PAVE -Y1- UP TO BUT NOT INCLUDING THE FINAL LAYER OF SURFACE COURSE. PLACE TEMPORARY MARKINGS IN THE FINAL PATTERN AS SHOWN ON THE PAVEMENT MARKING PLAN.

STEP 4: USING RSD 1101.02 (SHEET 1 OF 14), PLACE THE FINAL LAYER OF SURFACE COURSE ON -L- AND -Y1- AND PLACE FINAL MARKINGS AS SHOWN ON THE PAVEMENT MARKING PLAN.

STEP 5: REMOVE ALL TRAFFIC CONTROL DEVICES AND OPEN THE PROJECT TO THE FINAL TRAFFIC PATTERN.

ROADWAY STANDARD DRAWINGS

THE FOLLOWING ROADWAY STANDARDS AS APPEAR IN "ROADWAY STANDARD DRAWINGS" - PROJECT SERVICES UNIT - N.C. DEPARTMENT OF TRANSPORTATION - RALEIGH, N.C., DATED JANUARY 2012 ARE APPLICABLE TO THIS PROJECT AND BY REFERENCE HEREBY ARE CONSIDERED A PART OF THESE PLANS:

STD. NO.	TITLE
1101.01	WORK ZONE ADVANCE WARNING SIGNS
1101.02	TEMPORARY LANE CLOSURES
1101.04	TEMPORARY SHOULDER CLOSURES
1101.05	WORK ZONE VEHICLE ACCESSES
1101.11	TRAFFIC CONTROL DESIGN TABLES
1110.01	STATIONARY WORK ZONE SIGNS
1110.02	PORTABLE WORK ZONE SIGNS
1115.01	FLASHING ARROW BOARDS
1130.01	DRUMS
1135.01	CONES
1145.01	BARRICADES
1150.01	FLAGGING DEVICES
1180.01	SKINNY - DRUM
1205.01	PAVEMENT MARKINGS - LINE TYPES AND OFFSETS
1205.02	PAVEMENT MARKINGS - TWO LANE AND MULTILANE ROADWAYS
1261.01	GUARDRAIL AND BARRIER DELINEATORS - INSTALLATION SPACING
1261.02	GUARDRAIL AND BARRIER DELINEATORS - TYPES AND MOUNTING
1262.01	GUARDRAIL END DELINEATION
1264.01	OBJECT MARKERS - TYPES
1264.02	OBJECT MARKERS - INSTALLATION

Stantec
Stantec Consulting Services Inc.
801 Jones Franklin Road, Suite 300
Raleigh, NC 27606
Tel. 919.851.6866
Fax. 919.851.7024
www.stantec.com
License No. F-0672

REVIEW SET
NOT FOR CONSTRUCTION
11/29/2017

DOCUMENT NOT CONSIDERED FINAL UNLESS ALL SIGNATURES COMPLETED

SHEET NO.
TMP-1

TIP PROJECT: U-5999

11/29/2017
U:\Traffic\Transportation Management Plan\TCP\PLAN SHEETS\U-5999_TMP_01_TITLE.dgn
angood

DocuSign Envelope ID: D39467CC-5C6E-4FD7-A525-04F9F615B59C

TIP NO.	SHEET NO.
U-5999	PMP-1

APPROVED:

DATE:

SEAL

NORTH CAROLINA PROFESSIONAL SEAL 19862 ENGINEER J.W. WOOLARD JR.

DocuSigned by: J.W. Woolard Jr. 313C926F0C1E4AE...

1/3/2018

DOCUMENT NOT CONSIDERED FINAL UNLESS ALL SIGNATURES COMPLETED

Stantec

STATE OF NORTH CAROLINA
DEPARTMENT OF TRANSPORTATION

PAVEMENT MARKING PLAN
JOHNSTON COUNTY

LOCATION: KELLIE DRIVE FROM BOOKER DAIRY ROAD (SR 1923) TO BUFFALO ROAD (SR 1003)

GENERAL NOTES

THE FOLLOWING GENERAL NOTES APPLY AT ALL TIMES FOR THE DURATION OF THE CONSTRUCTION PROJECT, EXCEPT WHEN OTHERWISE NOTED IN THE PLAN, OR DIRECTED BY THE ENGINEER.

A) INSTALL PAVEMENT MARKINGS AND PAVEMENT MARKERS ON THE FINAL SURFACE AS FOLLOWS:

ROAD NAME	MARKING	MARKER
ALL ROADS	THERMOPLASTIC	PERMANENT RAISED

B) TIE PROPOSED PAVEMENT MARKING LINES TO EXISTING PAVEMENT MARKING LINES.

C) REMOVE/REPLACE ANY CONFLICTING/DAMAGED PAVEMENT MARKINGS AND MARKERS.

D) PASSING ZONES WILL BE DETERMINED IN THE FIELD AND MUST BE APPROVED BY THE ENGINEER.

E) UNLESS OTHERWISE SPECIFIED, HEATED-IN-PLACE THERMOPLASTIC MAY BE USED IN LIEU OF EXTRUDED THERMOPLASTIC FOR STOP BARS, SYMBOLS, CHARACTERS AND DIAGONALS.

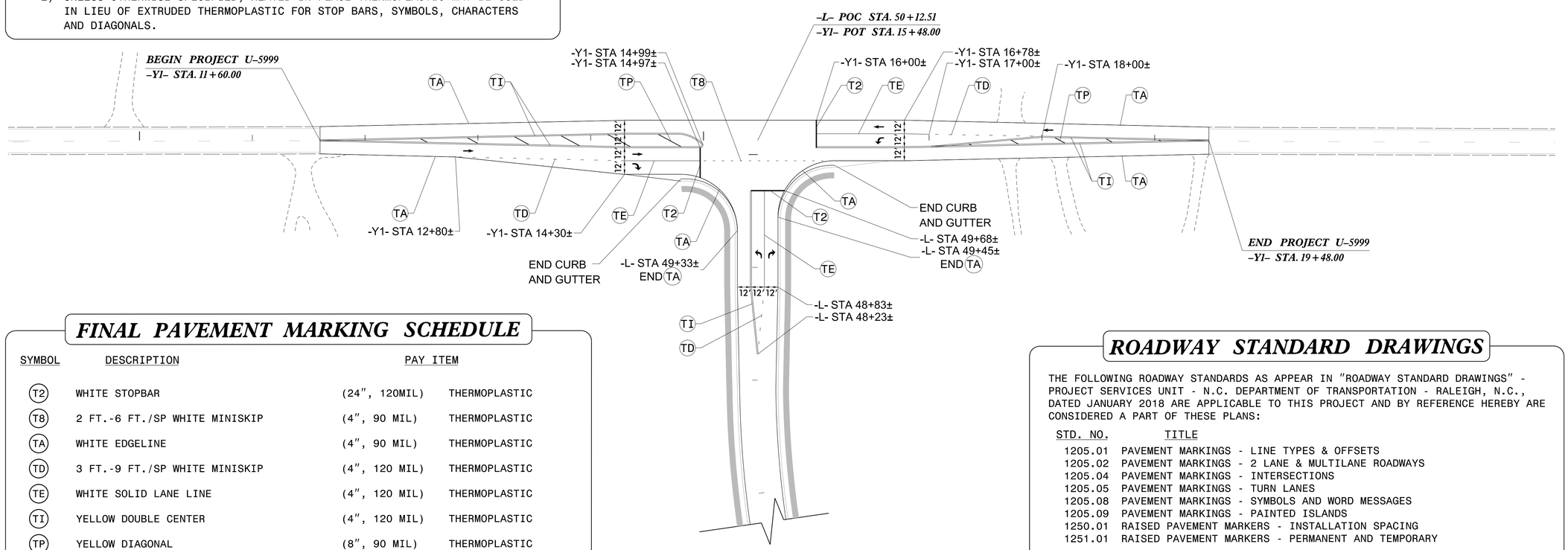

FINAL PAVEMENT MARKING SCHEDULE

SYMBOL	DESCRIPTION	PAY ITEM	
T2	WHITE STOPBAR	(24", 120MIL)	THERMOPLASTIC
T8	2 FT.-6 FT./SP WHITE MINISKIP	(4", 90 MIL)	THERMOPLASTIC
TA	WHITE EDGELINE	(4", 90 MIL)	THERMOPLASTIC
TD	3 FT.-9 FT./SP WHITE MINISKIP	(4", 120 MIL)	THERMOPLASTIC
TE	WHITE SOLID LANE LINE	(4", 120 MIL)	THERMOPLASTIC
TI	YELLOW DOUBLE CENTER	(4", 120 MIL)	THERMOPLASTIC
TP	YELLOW DIAGONAL	(8", 90 MIL)	THERMOPLASTIC

ROADWAY STANDARD DRAWINGS

THE FOLLOWING ROADWAY STANDARDS AS APPEAR IN "ROADWAY STANDARD DRAWINGS" - PROJECT SERVICES UNIT - N.C. DEPARTMENT OF TRANSPORTATION - RALEIGH, N.C., DATED JANUARY 2018 ARE APPLICABLE TO THIS PROJECT AND BY REFERENCE HEREBY ARE CONSIDERED A PART OF THESE PLANS:

STD. NO.	TITLE
1205.01	PAVEMENT MARKINGS - LINE TYPES & OFFSETS
1205.02	PAVEMENT MARKINGS - 2 LANE & MULTILANE ROADWAYS
1205.04	PAVEMENT MARKINGS - INTERSECTIONS
1205.05	PAVEMENT MARKINGS - TURN LANES
1205.08	PAVEMENT MARKINGS - SYMBOLS AND WORD MESSAGES
1205.09	PAVEMENT MARKINGS - PAINTED ISLANDS
1250.01	RAISED PAVEMENT MARKERS - INSTALLATION SPACING
1251.01	RAISED PAVEMENT MARKERS - PERMANENT AND TEMPORARY

PLAN REVIEWED BY: N.C.D.O.T. DIVISION 4 CONTACT

MATT CLARKE, PE — PROJECT ENGINEER

DIVISION OF HIGHWAYS · STATE OF NORTH CAROLINA · DEPARTMENT OF TRANSPORTATION · SIGNING AND DELINEATION UNIT

PLAN PREPARED BY:

JAY WOOLARD, P.E. — SENIOR TRANSPORTATION ENGINEER

ANDREW N. GOOD — TRANSPORTATION DESIGNER

Stantec
Stantec Consulting Services Inc.
801 Jones Franklin Road
Suite 300
Raleigh, NC 27606
Tel. (919) 851-6866
Fax. (919) 851-7024
www.stantec.com
License No. F-0672

INDEX

SHEET NO.	DESCRIPTION
PMP-1	PAVEMENT MARKING PLAN TITLE AND SCHEDULE SHEET
	PAVEMENT MARKING DETAIL

T.I.P.: U-5999

1/3/2018
U:\Traffic\Signing\CADD\PMP\Plan Sheets\U-5999_pmp_01.dgn
angood

TIP NO.	SHEET NO.
U-5999	PMP-1

APPROVED: _____

DATE: _____

SEAL

PRE-FINAL
DO NOT USE FOR CONSTRUCTION

DOCUMENT NOT CONSIDERED FINAL UNLESS ALL SIGNATURES COMPLETED

Stantec

STATE OF NORTH CAROLINA
DEPARTMENT OF TRANSPORTATION

PAVEMENT MARKING PLAN
JOHNSTON COUNTY

LOCATION: KELLIE DRIVE FROM BOOKER DAIRY ROAD (SR 1923) TO BUFFALO ROAD (SR 1003)

GENERAL NOTES

THE FOLLOWING GENERAL NOTES APPLY AT ALL TIMES FOR THE DURATION OF THE CONSTRUCTION PROJECT, EXCEPT WHEN OTHERWISE NOTED IN THE PLAN, OR DIRECTED BY THE ENGINEER.

A) INSTALL PAVEMENT MARKINGS AND PAVEMENT MARKERS ON THE FINAL SURFACE AS FOLLOWS:

ROAD NAME	MARKING	MARKER
ALL ROADS	THERMOPLASTIC	PERMANENT RAISED

B) TIE PROPOSED PAVEMENT MARKING LINES TO EXISTING PAVEMENT MARKING LINES.
C) REMOVE/REPLACE ANY CONFLICTING/DAMAGED PAVEMENT MARKINGS AND MARKERS.
D) PASSING ZONES WILL BE DETERMINED IN THE FIELD AND MUST BE APPROVED BY THE ENGINEER.
E) UNLESS OTHERWISE SPECIFIED, HEATED-IN-PLACE THERMOPLASTIC MAY BE USED IN LIEU OF EXTRUDED THERMOPLASTIC FOR STOP BARS, SYMBOLS, CHARACTERS AND DIAGONALS.

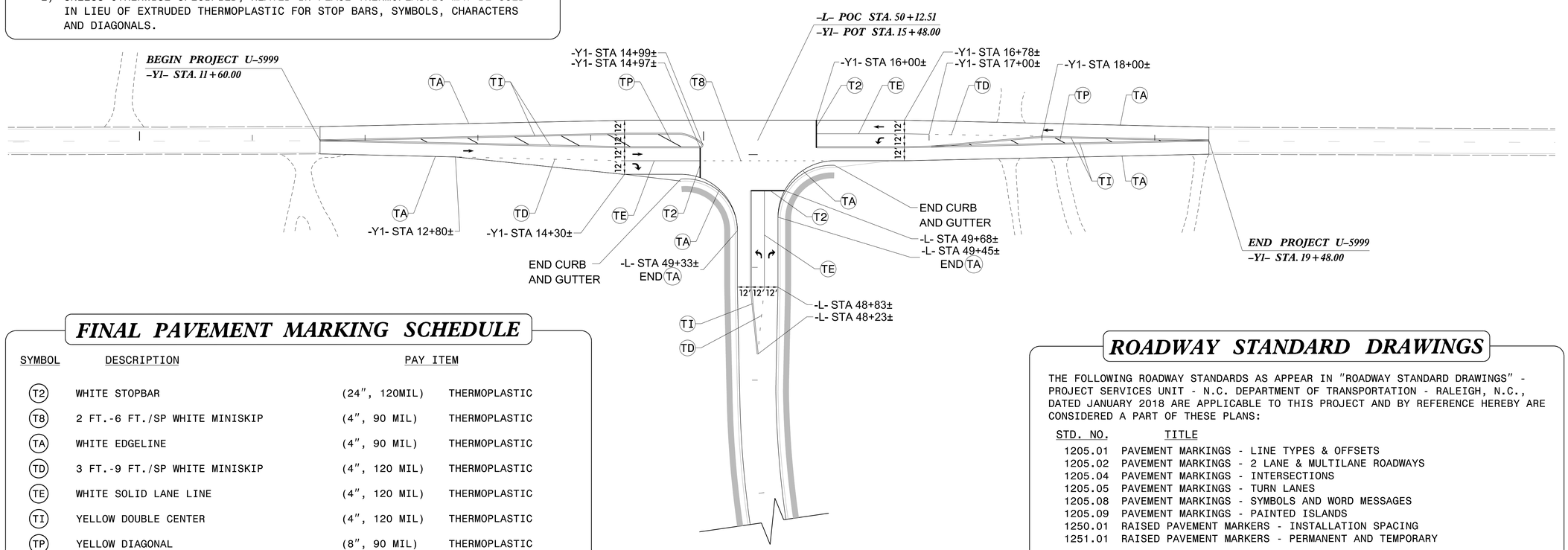

FINAL PAVEMENT MARKING SCHEDULE

SYMBOL	DESCRIPTION	PAY ITEM	
T2	WHITE STOPBAR	(24", 120MIL)	THERMOPLASTIC
T8	2 FT.-6 FT./SP WHITE MINISKIP	(4", 90 MIL)	THERMOPLASTIC
TA	WHITE EDGELINE	(4", 90 MIL)	THERMOPLASTIC
TD	3 FT.-9 FT./SP WHITE MINISKIP	(4", 120 MIL)	THERMOPLASTIC
TE	WHITE SOLID LANE LINE	(4", 120 MIL)	THERMOPLASTIC
TI	YELLOW DOUBLE CENTER	(4", 120 MIL)	THERMOPLASTIC
TP	YELLOW DIAGONAL	(8", 90 MIL)	THERMOPLASTIC

ROADWAY STANDARD DRAWINGS

THE FOLLOWING ROADWAY STANDARDS AS APPEAR IN "ROADWAY STANDARD DRAWINGS" - PROJECT SERVICES UNIT - N.C. DEPARTMENT OF TRANSPORTATION - RALEIGH, N.C., DATED JANUARY 2018 ARE APPLICABLE TO THIS PROJECT AND BY REFERENCE HEREBY ARE CONSIDERED A PART OF THESE PLANS:

STD. NO.	TITLE
1205.01	PAVEMENT MARKINGS - LINE TYPES & OFFSETS
1205.02	PAVEMENT MARKINGS - 2 LANE & MULTILANE ROADWAYS
1205.04	PAVEMENT MARKINGS - INTERSECTIONS
1205.05	PAVEMENT MARKINGS - TURN LANES
1205.08	PAVEMENT MARKINGS - SYMBOLS AND WORD MESSAGES
1205.09	PAVEMENT MARKINGS - PAINTED ISLANDS
1250.01	RAISED PAVEMENT MARKERS - INSTALLATION SPACING
1251.01	RAISED PAVEMENT MARKERS - PERMANENT AND TEMPORARY

PLAN REVIEWED BY: N.C.D.O.T. DIVISION 4 CONTACT

MATT CLARKE, PE — PROJECT ENGINEER

DIVISION OF HIGHWAYS · STATE OF NORTH CAROLINA · DEPARTMENT OF TRANSPORTATION · SIGNING AND DELINEATION UNIT

PLAN PREPARED BY:

JAY WOOLARD, P.E. — SENIOR TRANSPORTATION ENGINEER
ANDREW N. GOOD — TRANSPORTATION DESIGNER

Stantec
Stantec Consulting Services Inc.
801 Jones Franklin Road
Suite 300
Raleigh, NC 27606
Tel. (919) 851-6866
Fax. (919) 851-7024
www.stantec.com
License No. F-0672

INDEX

SHEET NO.	DESCRIPTION
PMP-1	PAVEMENT MARKING PLAN TITLE AND SCHEDULE SHEET
	PAVEMENT MARKING DETAIL

T.I.P.: U-5999

12/7/2017
J:\Traffic\Signing\CADD\PMP\Plan Sheets\U-5999_pmp_01.dgn
angood

TIP PROJECT: U-5999

STATE	STATE PROJECT REFERENCE NO.	SHEET NO.	TOTAL SHEETS
N.C.	U-5999	EC-1	

STATE PROJ. NO.	F.A. PROJ. NO.	DESCRIPTION

STATE OF NORTH CAROLINA
DIVISION OF HIGHWAYS

PLAN FOR PROPOSED
HIGHWAY EROSION CONTROL

JOHNSTON COUNTY

LOCATION: KELLIE DRIVE FROM BOOKER DAIRY ROAD (SR 1923) TO BUFFALO ROAD (SR1003)

TYPE OF WORK: GRADING, PAVING, DRAINAGE, AND SIGNAL

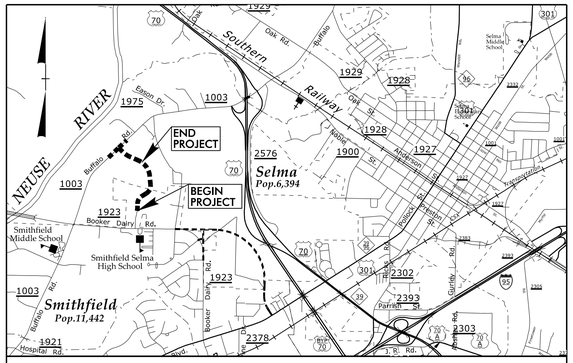

VICINITY MAP

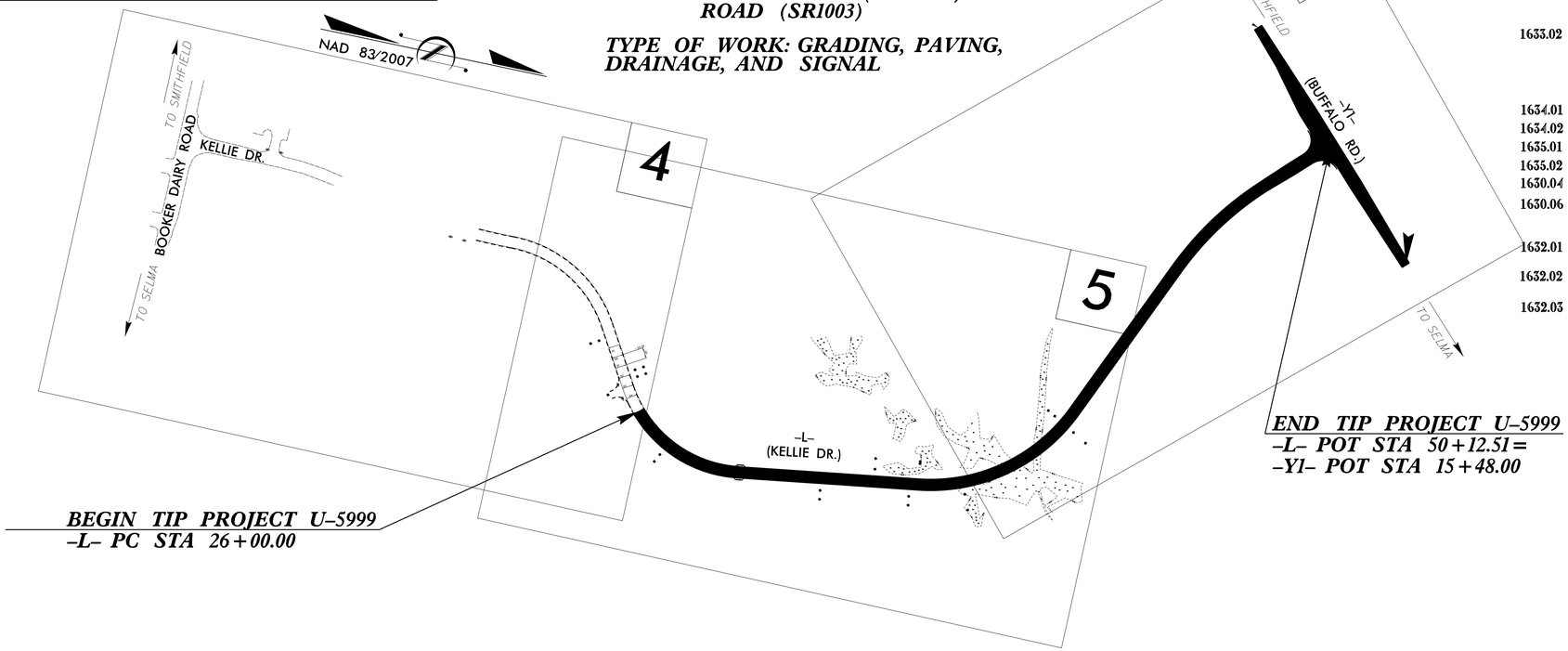

BEGIN TIP PROJECT U-5999
-L- PC STA 26+00.00

END TIP PROJECT U-5999
-L- POT STA 50+12.51 =
-Y1- POT STA 15+48.00

EROSION AND SEDIMENT CONTROL MEASURES

Std. #	Description	Symbol
1630.03	Temporary Silt Ditch	TSD
1630.05	Temporary Diversion	TD
1605.01	Temporary Silt Fence	
1606.01	Special Sediment Control Fence	
1622.01	Temporary Berms and Slope Drains	
1630.02	Silt Basin Type B	
1633.01	Temporary Rock Silt Check Type-A	
	Temporary Rock Silt Check Type-A with Matting and Polyacrylamide (PAM)	
1633.02	Temporary Rock Silt Check Type-B	
	Wattle / Coir Fiber Wattle	EW CFW
	Wattle / Coir Fiber Wattle with Polyacrylamide (PAM)	
1634.01	Temporary Rock Sediment Dam Type-A	
1634.02	Temporary Rock Sediment Dam Type-B	
1635.01	Rock Pipe Inlet Sediment Trap Type-A	
1635.02	Rock Pipe Inlet Sediment Trap Type-B	
1630.04	Stilling Basin	
1630.06	Special Stilling Basin	
	Rock Inlet Sediment Trap:	
1632.01	Type A	A
1632.02	Type B	B
1632.03	Type C	C
	Skimmer Basin	
	Tiered Skimmer Basin	
	Infiltration Basin	

THIS PROJECT CONTAINS EROSION CONTROL PLANS FOR CLEARING AND GRUBBING PHASE OF CONSTRUCTION.

THIS PROJECT HAS BEEN DESIGNED TO SENSITIVE WATERSHED STANDARDS.

GRAPHIC SCALE

0
PLANS

0
PROFILE (HORIZONTAL)

0
PROFILE (VERTICAL)

THESE EROSION AND SEDIMENT CONTROL PLANS COMPLY WITH THE REGULATIONS SET FORTH BY THE NCG-010000 GENERAL CONSTRUCTION PERMIT EFFECTIVE AUGUST 1, 2016 AND ISSUED BY THE NORTH CAROLINA DEPARTMENT OF ENVIRONMENTAL QUALITY DIVISION OF WATER RESOURCES.

Prepared in the Office of:

MI ENGINEERING
1011 SCHAUBE DRIVE, SUITE 100
RALEIGH, NC 27606

Designed by:

KAREN HEFNER, PE — ***3428***
NAME — *LEVEL III CERTIFICATION NO.*

Reviewed in the Office of:

ROADSIDE ENVIRONMENTAL UNIT
1 South Wilmington St.
Raleigh, NC 27611

2018 STANDARD SPECIFICATIONS

Reviewed by:

Noelle Ring, CPESC

Roadway Standard Drawings

The following roadway english standards as appear in "Roadway Standard Drawings"– Roadway Design Unit – N. C. Department of Transportation – Raleigh, N. C., dated January 2018 and the latest revison thereto are applicable to this project and by reference hereby are considered a part of these plans.

1604.01	Railroad Erosion Control Detail	1632.01	Rock Inlet Sediment Trap Type A
1605.01	Temporary Silt Fence	1632.02	Rock Inlet Sediment Trap Type B
1606.01	Special Sediment Control Fence	1632.03	Rock Inlet Sediment Trap Type C
1607.01	Gravel Construction Entrance	1633.01	Temporary Rock Silt Check Type A
1622.01	Temporary Berms and Slope Drains	1633.02	Temporary Rock Silt Check Type B
1630.01	Riser Basin	1634.01	Temporary Rock Sediment Dam Type A
1630.02	Silt Basin Type B	1634.02	Temporary Rock Sediment Dam Type B
1630.03	Temporary Silt Ditch	1635.01	Rock Pipe Inlet Sediment Trap Type A
1630.04	Stilling Basin	1635.02	Rock Pipe Inlet Sediment Trap Type B
1630.05	Temporary Diversion	1640.01	Coir Fiber Baffle
1630.06	Special Stilling Basin	1645.01	Temporary Stream Crossing
1631.01	Matting Installation		

PROJECT REFERENCE NO.	SHEET NO.
U-5999	EC-2
R/W SHEET NO.	
ROADWAY DESIGN ENGINEER	HYDRAULICS ENGINEER

SKIMMER BASIN WITH BAFFLES DETAIL (EAST)

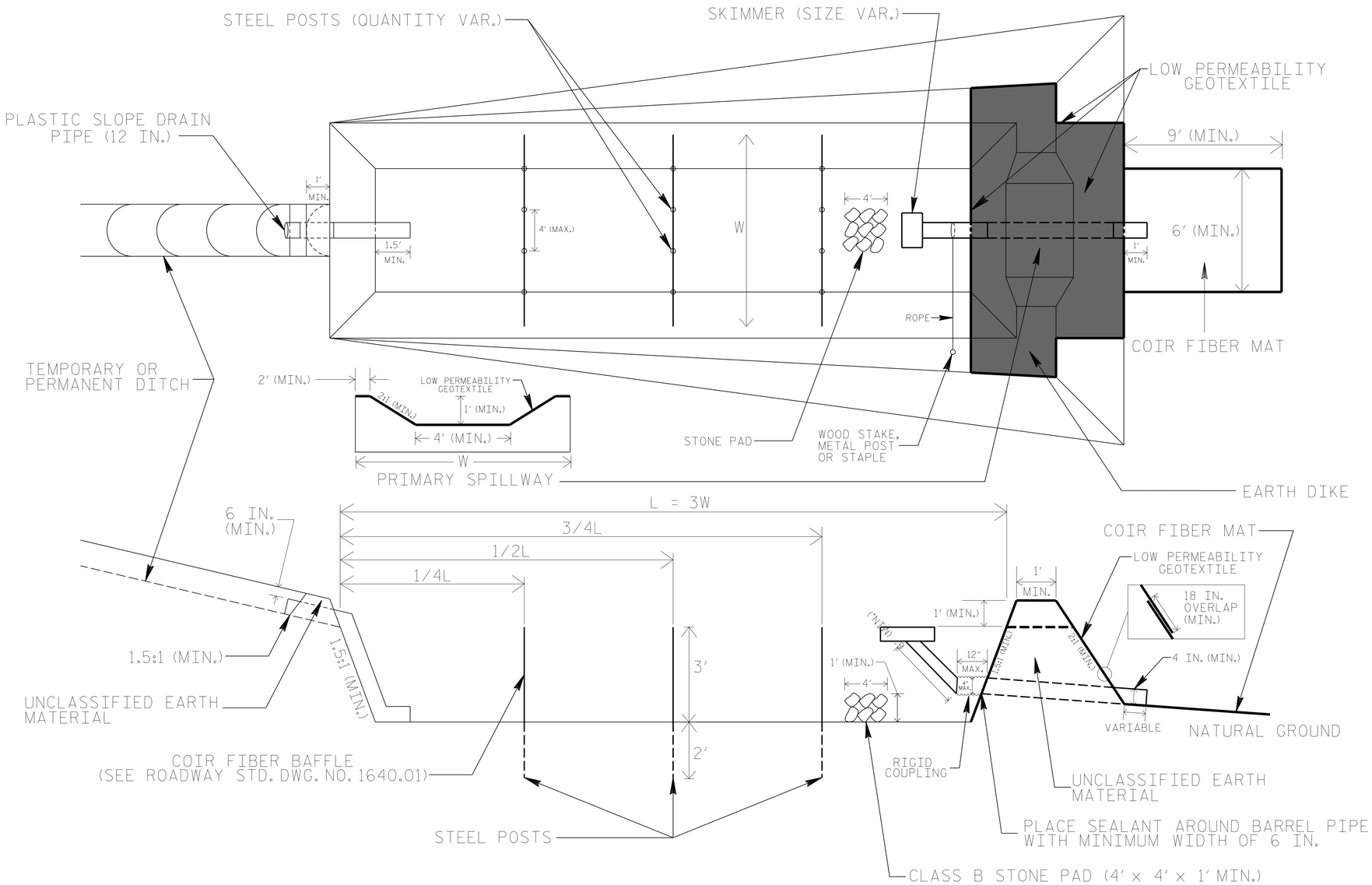

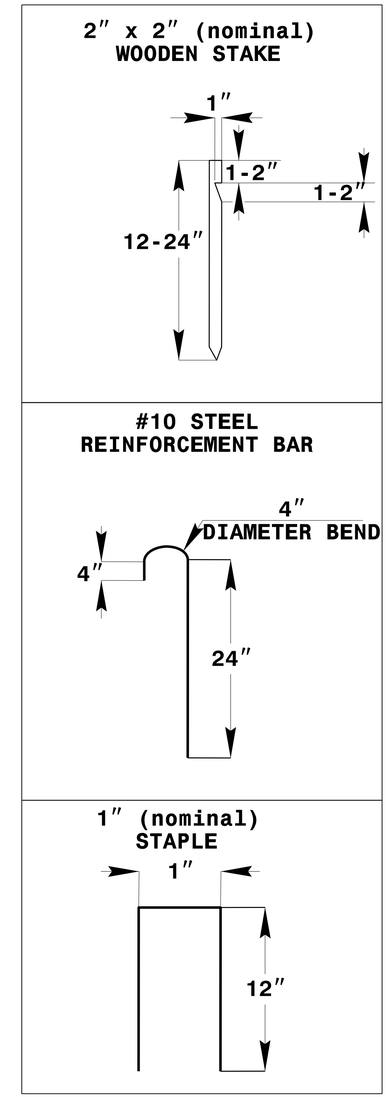

COIR FIBER MAT ANCHOR OPTIONS

NOTES

1. SEED AND PLACE MATTING FOR EROSION CONTROL ON INTERIOR AND EXTERIOR SIDESLOPES.
2. LIMIT EARTH DIKE HEIGHT TO 5 FT.
3. FOR BASIN DEPTH OF 3 FT., THE MINIMUM BASIN WIDTH SHALL BE 9 FT.
4. DETERMINE PRIMARY SPILLWAY WEIR LENGTH (FT.) USING Q/0.8, WHERE Q IS FLOW RATE (CFS) INTO BASIN.
5. PLASTIC SLOPE DRAIN PIPE AT INLET OF BASIN MAY BE REPLACED BY FILTRATION GEOTEXTILE OR TARP AS DIRECTED.
6. LOW PERMEABILITY GEOTEXTILE FOR PRIMARY SPILLWAY SHALL BE ONE CONTINUOUS PIECE OF MATERIAL OR OVERLAPPED 18 IN. (MIN.).

NOT TO SCALE

PROJECT REFERENCE NO.	SHEET NO.
U-5999	EC-2A
R/W SHEET NO.	
ROADWAY DESIGN ENGINEER	HYDRAULICS ENGINEER

COIR FIBER WATTLE WITH POLYACRYLAMIDE (PAM) DETAIL

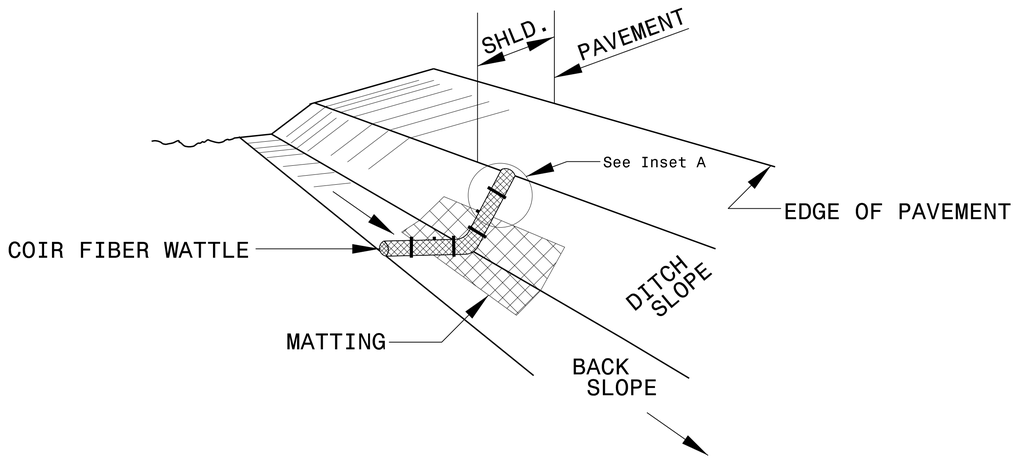

ISOMETRIC VIEW

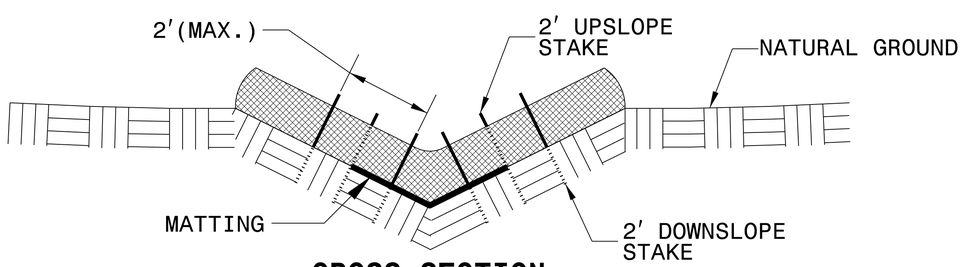

CROSS SECTION VEE DITCH

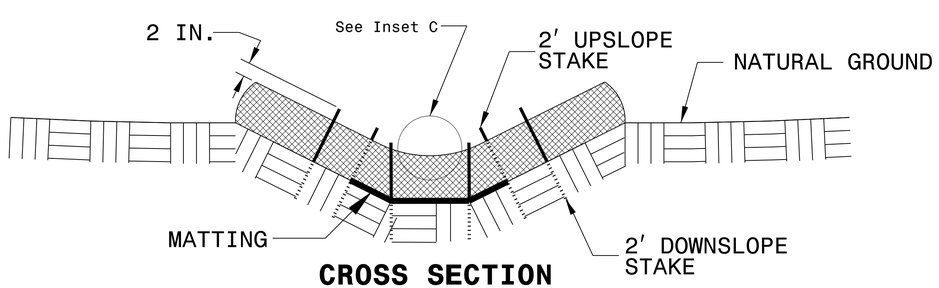

CROSS SECTION TRAPEZOIDAL DITCH

NOTES:

USE MINIMUM 12 IN. DIAMETER COIR FIBER (COCONUT FIBER) WATTLE.

USE 2 FT. WOODEN STAKES WITH A 2 IN. BY 2 IN. NOMINAL CROSS SECTION.

ONLY INSTALL WATTLE(S) TO A HEIGHT IN DITCH SO FLOW WILL NOT WASH AROUND WATTLE AND SCOUR DITCH SLOPES AND AS DIRECTED.

INSTALL A MINIMUM OF 2 UPSLOPE STAKES AND 4 DOWNSLOPE STAKES AT AN ANGLE TO WEDGE WATTLE TO BOTTOM OF DITCH.

PROVIDE STAPLES MADE OF 0.125 IN. DIAMETER STEEL WIRE FORMED INTO A U SHAPE NOT LESS THAN 12″ IN LENGTH.

INSTALL STAPLES APPROXIMATELY EVERY 1 LINEAR FOOT ON BOTH SIDES OF WATTLE AND AT EACH END TO SECURE IT TO THE SOIL.

INSTALL MATTING IN ACCORDANCE WITH SECTION 1631 OF THE STANDARD SPECIFICATIONS.

PRIOR TO POLYACRYLAMIDE (PAM) APPLICATION, OBTAIN A SOIL SAMPLE FROM PROJECT LOCATION, AND FROM OFFSITE MATERIAL, AND ANALYZE FOR APPROPRIATE PAM FLOCCULANT TO BE APPLIED TO EACH WATTLE.

INITIALLY APPLY 2 OUNCES OF ANIONIC OR NEUTRALLY CHARGED PAM OVER WATTLE WHERE WATER WILL FLOW AND 1 OUNCE OF PAM ON MATTING ON EACH SIDE OF WATTLE. REAPPLY PAM AFTER EVERY RAINFALL EVENT THAT IS EQUAL TO OR EXCEEDS 0.50 IN.

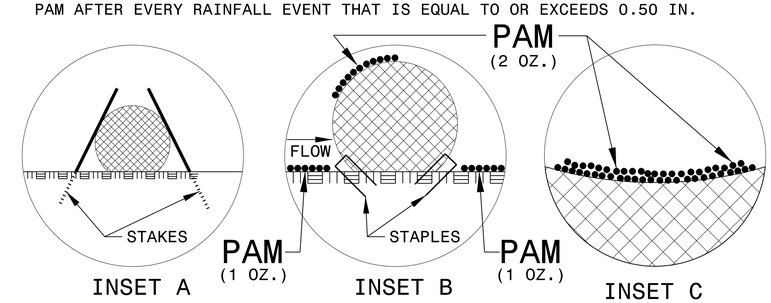

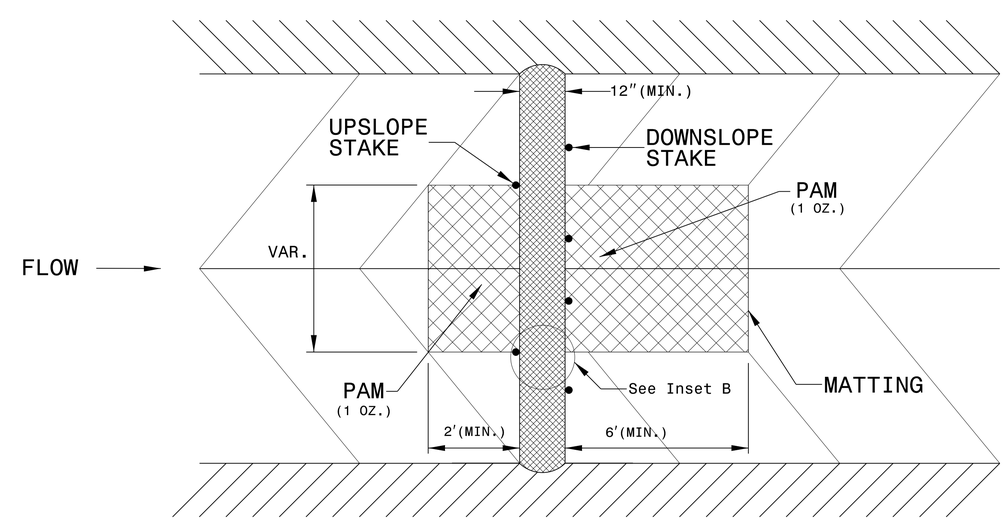

TOP VIEW

PROJECT REFERENCE NO.	SHEET NO.
U-5999	EC-2B
R/W SHEET NO.	
ROADWAY DESIGN ENGINEER	HYDRAULICS ENGINEER

TEMPORARY ROCK SILT CHECK TYPE 'A' WITH EXCELSIOR MATTING AND POLYACRYLAMIDE (PAM)

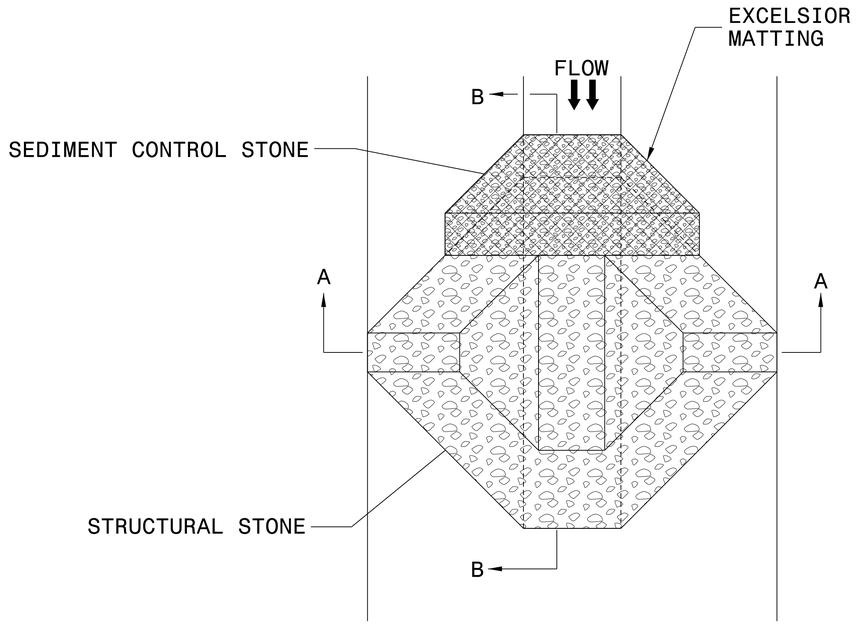

PLAN

NOTES:

INSTALL TEMPORARY ROCK SILT CHECK TYPE A IN ACCORDANCE WITH ROADWAY STANDARD DRAWING NO. 1633.01.

USE EXCELSIOR FOR MATTING MATERIAL AND ANCHOR MATTING SECTION AT TOP AND BOTTOM WITH CLASS B STONE.

PRIOR TO POLYACRYLAMIDE (PAM) APPLICATION, OBTAIN A SOIL SAMPLE FROM PROJECT LOCATION, AND FROM OFFSITE MATERIAL, AND ANALYZE FOR APPROPRIATE PAM FLOCCULANT TO BE APPLIED TO EACH ROCK SILT CHECK.

INITIALLY APPLY 4 OUNCES OF POLYACRYLAMIDE (PAM) TO TOP OF MATTING SECTION AND AFTER EVERY RAINFALL EVENT THAT EQUALS OR EXCEEDS 0.50 INCHES.

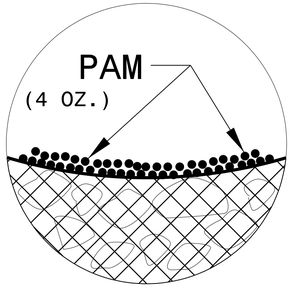

INSET A

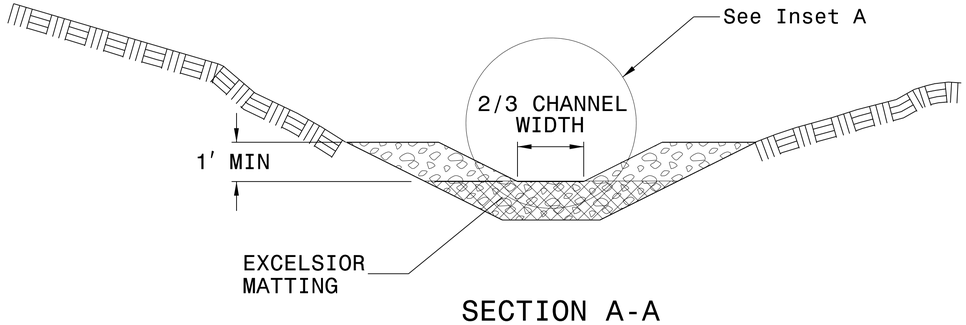

SECTION A-A

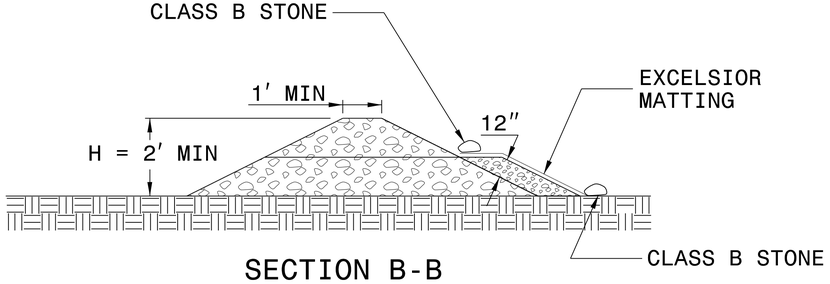

SECTION B-B

NOT TO SCALE

PROJECT REFERENCE NO.	SHEET NO.
U-5999	EC-3
ROADWAY DESIGN ENGINEER	HYDRAULICS ENGINEER

DIVISION OF HIGHWAYS
STATE OF NORTH CAROLINA

SOIL STABILIZATION SUMMARY SHEET

MATTING FOR EROSION CONTROL

CONST SHEET NO.	LINE	FROM STATION	TO STATION	SIDE	ESTIMATE (SY)
5	-L-	32+07	33+45	RT	25
5	-L-	37+87	38+75	RT	125
6	-Y1-	12+00	14+68	RT	95
6	-Y1-	16+00	19+00	RT	105
6	-Y1-	13+50	16+50	LT	90
6	-Y1-	17+00	18+00	LT	35
				SUBTOTAL	475
MISCELLANEOUS MATTING TO BE INSTALLED AS DIRECTED BY THE ENGINEER					4065
				TOTAL	4540
				SAY	4540

MATTING FOR EROSION CONTROL

CONST SHEET NO.	LINE	FROM STATION	TO STATION	SIDE	ESTIMATE (SY)

PROJECT REFERENCE NO.	SHEET NO.
U-5999	EC-3A
ROADWAY DESIGN ENGINEER	HYDRAULICS ENGINEER

DIVISION OF HIGHWAYS
STATE OF NORTH CAROLINA

SOIL STABILIZATION TIMEFRAMES

SITE DESCRIPTION	STABILIZATION TIME	TIMEFRAME EXCEPTIONS
PERIMETER DIKES, SWALES, DITCHES AND SLOPES	7 DAYS	NONE
HIGH QUALITY WATER (HQW) ZONES	7 DAYS	NONE
SLOPES STEEPER THAN 3:1	7 DAYS	IF SLOPES ARE 10' OR LESS IN LENGTH AND ARE NOT STEEPER THAN 2:1, 14 DAYS ARE ALLOWED.
SLOPES 3:1 OR FLATTER	14 DAYS	7 DAYS FOR SLOPES GREATER THAN 50' IN LENGTH.
ALL OTHER AREAS WITH SLOPES FLATTER THAN 4:1	14 DAYS	NONE, EXCEPT FOR PERIMETERS AND HQW ZONES.

PROJECT REFERENCE NO.	SHEET NO.
U-5999	EC-04/CONST.04
R/W SHEET NO.	
ROADWAY DESIGN ENGINEER	HYDRAULICS ENGINEER

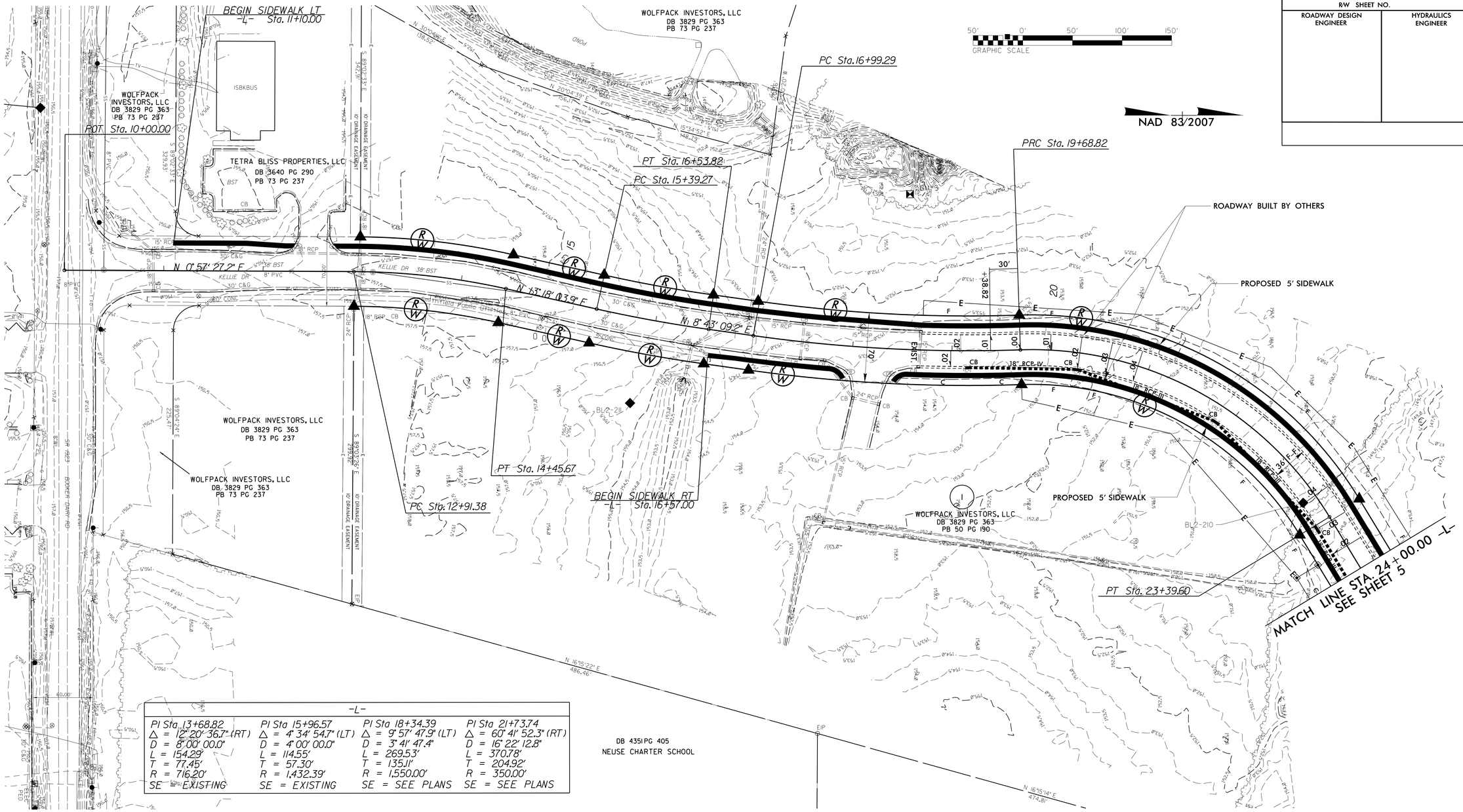

-L-			
PI Sta 13+68.82	PI Sta 15+96.57	PI Sta 18+34.39	PI Sta 21+73.74
Δ = 12° 20' 36.7" (RT)	Δ = 4° 34' 54.7" (LT)	Δ = 9° 57' 47.9" (LT)	Δ = 60° 41' 52.3" (RT)
D = 8° 00' 00.0"	D = 4° 00' 00.0"	D = 3° 41' 47.4"	D = 16° 22' 12.8"
L = 154.29'	L = 114.55'	L = 269.53'	L = 370.78'
T = 77.45'	T = 57.30'	T = 135.11'	T = 204.92'
R = 716.20'	R = 1,432.39'	R = 1,550.00'	R = 350.00'
SE = EXISTING	SE = EXISTING	SE = SEE PLANS	SE = SEE PLANS

CLEARING & GRUBBING PLAN

REVISIONS

8/17/99

$$$$$$$$SYSTIME$$$$$$
$$$$$$$$STEENAME$$$$EDON$$$$$$$$$$$$$$$$$$$$

SEE SHEETS 7 & 8 FOR -L- PROFILE

PROJECT REFERENCE NO.	SHEET NO.
U-5999	EC-05/CONST.05
R/W SHEET NO.	
ROADWAY DESIGN ENGINEER	HYDRAULICS ENGINEER

50' 0' 50' 100' 150'
GRAPHIC SCALE

NAD 83/2007

CLEARING AND GRUBBING
EROSION CONTROL FOR
CONSTRUCTION SHEET _5_

NOTE:
PLACE TEMPORARY ROCK SEDIMENT DAMS TYPE – B AND TEMPORARY ROCK SILT CHECKS TYPE – A AT DRAINAGE OUTLETS.

NOTE:
PERIMETER EROSION CONTROL MEASURES SHALL BE INSTALLED DURING CLEARING AND GRUBBING PHASE.

NOTE:
UTILIZE SPECIAL STILLING BASINS WHERE APPLICABLE.

INSTALL PIPE(S) IN JURISDICTIONAL AREAS WITHOUT IMPACTING STREAM UNTIL AREA STABILIZED AND ACCORDING TO NCDOT BEST MANAGEMENT PRACTICES FOR CONSTRUCTION AND MAINTENANCE ACTIVITIES MANUAL.

DETAIL C
SPECIAL LATERAL 'V' DITCH
(Not to Scale)

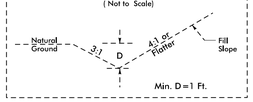

FROM STA. 24+00 TO STA. 25+91 RT
(COMPLETED BY OTHERS)

DETAIL B
LATERAL BASE DITCH
(Not to Scale)

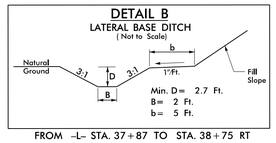

FROM –L– STA. 37+87 TO STA. 38+75 RT

DETAIL D
SPECIAL LATERAL BASE DITCH
(Not to Scale)

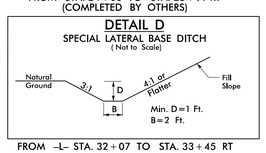

FROM –L– STA. 32+07 TO STA. 33+45 RT

DETAIL E
TOE PROTECTION
(Not to Scale)

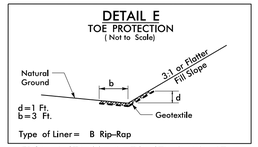

Type of Liner= B Rip-Rap

FROM L STA. 33+45 TO STA. 35+20 LT
FROM L STA. 35+75 TO STA. 37+25 LT
FROM L STA. 35+85 TO STA. 37+90 RT
FROM L STA. 38+40 TO STA. 38+80 LT

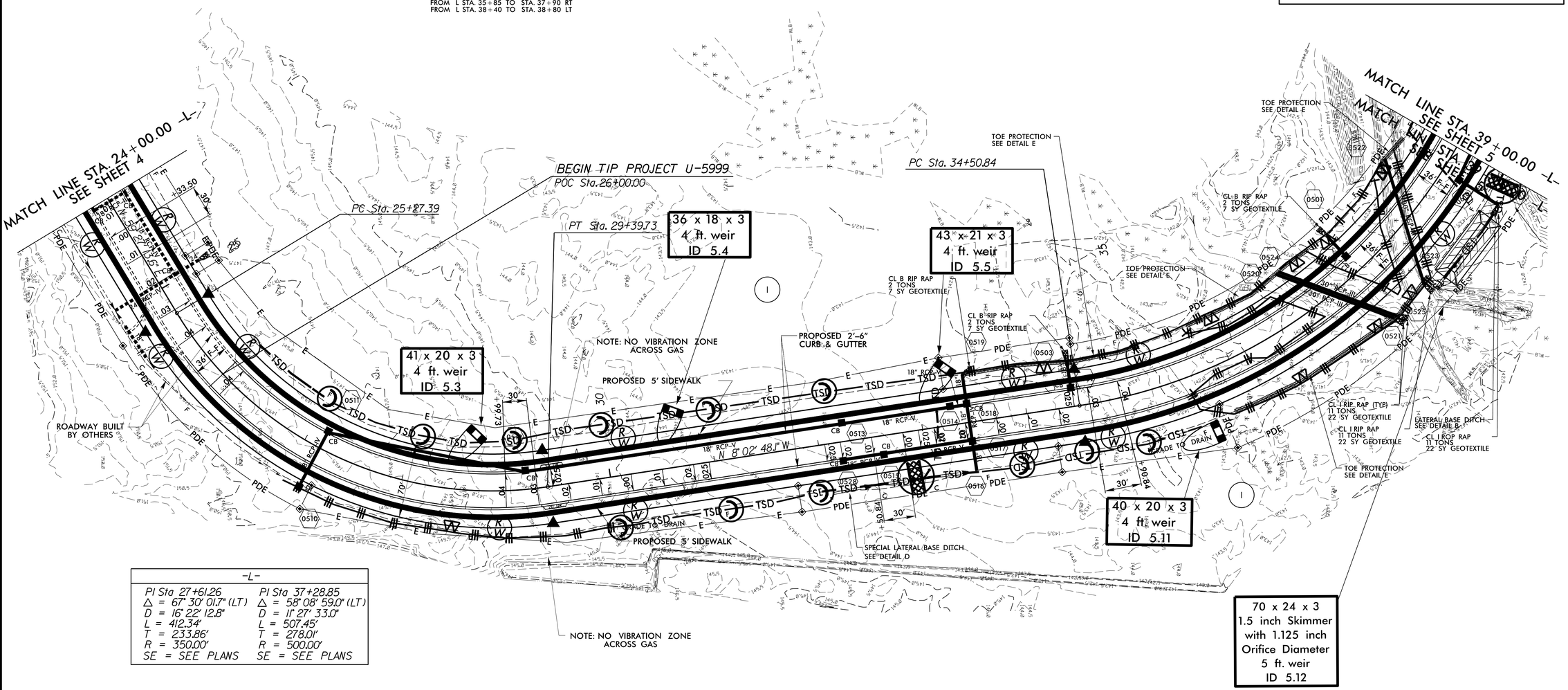

–L–	
PI Sta 27+61.26	PI Sta 37+28.85
△ = 67° 30' 01.7" (LT)	△ = 58° 08' 59.0" (LT)
D = 16° 22' 12.8"	D = 11° 27' 33.0"
L = 412.34'	L = 507.45'
T = 233.86'	T = 278.01'
R = 350.00'	R = 500.00'
SE = SEE PLANS	SE = SEE PLANS

CLEARING & GRUBBING PLAN

SEE SHEETS 7 & 8 FOR –L– PROFILE

REVISIONS

8/17/99

$$$$$SYSTIME$$$$
$$$$$

PROJECT REFERENCE NO.	SHEET NO.
U-5999	EC-05A/CONST.05
R/W SHEET NO.	
ROADWAY DESIGN ENGINEER	HYDRAULICS ENGINEER

PIPE CONSTRUCTION SEQUENCE STA. 38+13 –L–
(NTS)

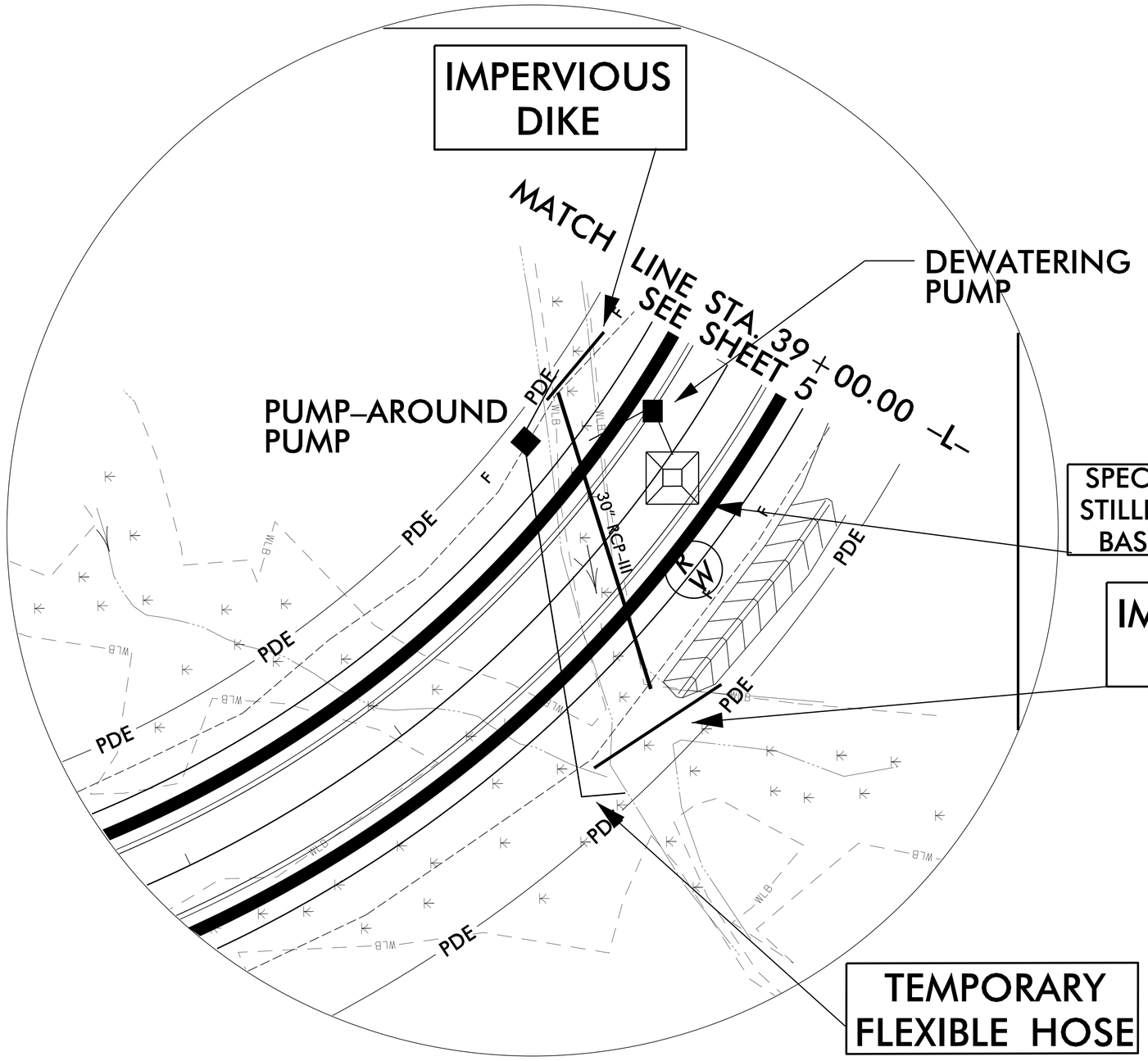

NOTES:

1. PIPE INSTALLATION SHALL BE PERFORMED IN ONLY DRY OR ISOLATED SECTIONS OF CHANNEL.

2. IMPERVIOUS DIKES ARE TO BE USED TO ISOLATE WORK FROM STREAM FLOW AS NECESSARY.

3. ALL GRADED AREAS TO BE STABILIZED WITHIN 24 HOURS.

4. MAINTENANCE OF STREAM FLOW OPERATIONS SHALL BE INCIDENTAL TO THE WORK. THIS INCLUDES POLYETHYLENE SHEETING, DIVERSION PIPES, PUMPS, AND HOSES.

5. PUMPS AND HOSES SHALL BE SUFFICIENT SIZE TO DEWATER THE WORK AREA.

6. THE CONTRACTOR SHALL NOT PUMP SEDIMENT–LADEN WATER DIRECTLY INTO THE STREAM. FOR DEWATERING OF PIPE SITE THE CONTRACTOR SHALL FILTER SEDIMENT–LADEN WATER THROUGH A STILLING BASIN AND/OR SPECIAL STILLING BASIN.

7. UTILIZE A STABILIZED OUTLET INSTEAD OF A SPECIAL STILLING BASIN IF PUMPING CLEAN WATER.

SEQUENCE OF CONSTRUCTION FOR TYPICAL WORK AREA:

1. INSTALL SPECIAL STILLING BASIN(S).

2. INSTALL UPSTREAM PUMP AND TEMPORARY FLEXIBLE HOSE.

3. PLACE UPSTREAM IMPERVIOUS DIKE AND BEGIN PUMPING OPERATIONS.

4. PLACE DOWNSTREAM IMPERVIOUS DIKE AND PUMPING APPARATUS. DEWATER ENTRAPPED AREA. AREA TO BE DEWATERED SHALL BE EQUAL TO ONE DAY'S WORK.

5. INSTALL 30" RCP–III IN ACCORDANCE WITH THE PLANS.

6 EXCAVATE ANY ACCUMULATED SILT AND DEWATER BEFORE REMOVAL OF IMPERVIOUS DIKES. REMOVE IMPERVIOUS DIKES, PUMPS, AND TEMPORARY FLEXIBLE HOSE. (DOWNSTREAM IMPERVIOUS DIKES FIRST).

7. REMOVE SPECIAL STILLING BASIN(S) AND BACKFILL. STABILIZE DISTURBED AREA WITH SEED & MULCH.

CLEARING & GRUBBING PLAN

PROJECT REFERENCE NO.	SHEET NO.
U-5999	EC-06/CONST.06
R/W SHEET NO.	
ROADWAY DESIGN ENGINEER	HYDRAULICS ENGINEER

NOTE:
PERIMETER EROSION CONTROL MEASURES SHALL BE INSTALLED DURING CLEARING AND GRUBBING PHASE.

CLEARING AND GRUBBING EROSION CONTROL FOR CONSTRUCTION SHEET _6_

NOTE:
PLACE TEMPORARY ROCK SEDIMENT DAMS TYPE – B AND TEMPORARY ROCK SILT CHECKS TYPE – A AT DRAINAGE OUTLETS.

NAD 83/2007

DETAIL A
STANDARD BASE DITCH
(Not to Scale)

Natural Ground, 3:1, D, 3:1, Natural Ground; B
Min. D=1 Ft.
B=2 Ft.

Y1 STA. 16+20 LT, L=20', S=0.3%

DETAIL F
SPECIAL CUT DITCH
(Not to Scale)

Natural Ground, 3:1, D, 3:1 or Flatter, Front Ditch Slope
Min. D=1 Ft.

FROM Y1 STA. 14+50 TO STA. 14+68 RT.
FROM Y1 STA. 16+33 TO STA. 16+50 RT.
FROM Y1 STA. 15+50 TO STA. 16+50 LT.

-L-	
PI Sta 37+28.85	PI Sta 46+28.81
△ = 58° 08' 59.0" (LT)	△ = 22° 25' 16.7" (RT)
D = 11° 27' 33.0"	D = 6° 21' 58.3"
L = 507.45'	L = 352.19'
T = 278.01'	T = 178.38'
R = 500.00'	R = 900.00'
SE = SEE PLANS	SE = SEE PLANS

ANN FLOWERS LEE
DB 1179 PG 662

CALLIE JONES
DB 455 PG 236

CALLIE JONES
NO DEED INFO

ROMEY LANGSTON
DB 1348 PG 646

WOLFPACK INVESTORS, LLC
DB 4790 PG 827
PB 83 PG 151

RALPH STANCIL
DB 2453 PG 574

KELLIE STEPHENSON
DB 4049 PG 328
PB 83 PG 151

RALPH STANCIL
DB 1326 PG 832

38 x 18 x 3
1.5 inch Skimmer
with 0.625 inch
Orifice Diameter
4 ft. weir
ID 6.1

38 x 18 x 3
1.5 inch Skimmer
with 0.625 inch
Orifice Diameter
4 ft. weir
ID 6.6

POT Sta. 10+00.00

BEGIN CONSTRUCTION
-Y1- Sta.11+60.00

END TIP PROJECT U-5999
-L- POT Sta.50+12.51=
-Y1- POT Sta.15+48.00

END CONSTRUCTION
-Y1- Sta.19+48.00

POT Sta. 19+78.51

PT Sta. 39+58.29

PT Sta. 48+02.63

PC Sta. 44+50.43

MATCH LINE STA. 39+00.00 -L-
SEE SHEET 5

N 46° 13' 29.6" E

N 43° 46' 30.4" W

N 66° 11' 47" W

150' RIGHT TURN TAPER

100' UNIFORM TAPER

270' UNIFORM TAPER

8:1 TAPER

50' FULL STORAGE

75' FULL STORAGE

PROPOSED 2'-6" CURB & GUTTER

PROPOSED 5' SIDEWALK

GRADE TO DRAIN

DO NOT DISTURB BUILDING

SPECIAL CUT DITCH
SEE DETAIL F

CL B RIP RAP
3 TONS
10 SY GEOTEXTILE
2 CY DDE

STANDARD BASE DITCH
SEE DETAIL A

REMOVE

RETAIN

EXIST. EASEMENT

GRAPHIC SCALE

SEE SHEETS 7 & 8 FOR -L- PROFILE
SEE SHEET 8 FOR -Y1- PROFILE

REVISIONS

8/17/99

PROJECT REFERENCE NO.	SHEET NO.
U-5999	EC-07/CONST.04
R/W SHEET NO.	
ROADWAY DESIGN ENGINEER	HYDRAULICS ENGINEER

REVISIONS

8/17/99

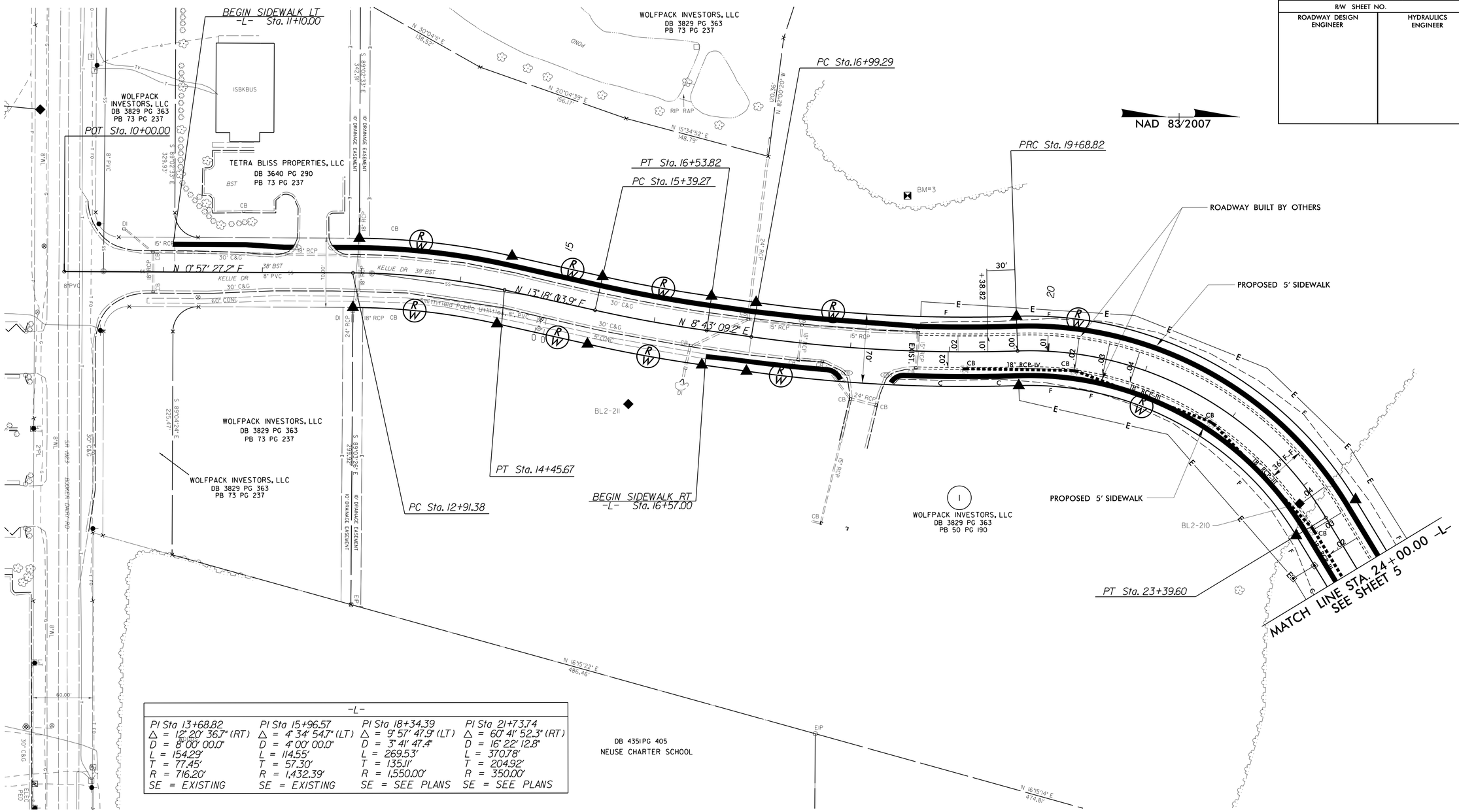

-L-			
PI Sta 13+68.82	PI Sta 15+96.57	PI Sta 18+34.39	PI Sta 21+73.74
Δ = 12° 20' 36.7" (RT)	Δ = 4° 34' 54.7" (LT)	Δ = 9° 57' 47.9" (LT)	Δ = 60° 41' 52.3" (RT)
D = 8° 00' 00.0"	D = 4° 00' 00.0"	D = 3° 41' 47.4"	D = 16° 22' 12.8"
L = 154.29'	L = 114.55'	L = 269.53'	L = 370.78'
T = 77.45'	T = 57.30'	T = 135.11'	T = 204.92'
R = 716.20'	R = 1,432.39'	R = 1,550.00'	R = 350.00'
SE = EXISTING	SE = EXISTING	SE = SEE PLANS	SE = SEE PLANS

FINAL GRADE PLAN

SEE SHEETS 7 & 8 FOR -L- PROFILE

$$$$$$$$SYSTIME$$$$$$
$$$$$$$$SYSTEDIT$$$$$$
$$$$$$$$SYSTEDON$$$$$$
$$$$$$$$SYSTENAME$$$$$$

PROJECT REFERENCE NO.	SHEET NO.
U-5999	EC-08/CONST.05
R/W SHEET NO.	
ROADWAY DESIGN ENGINEER	HYDRAULICS ENGINEER

REVISIONS

8/17/99

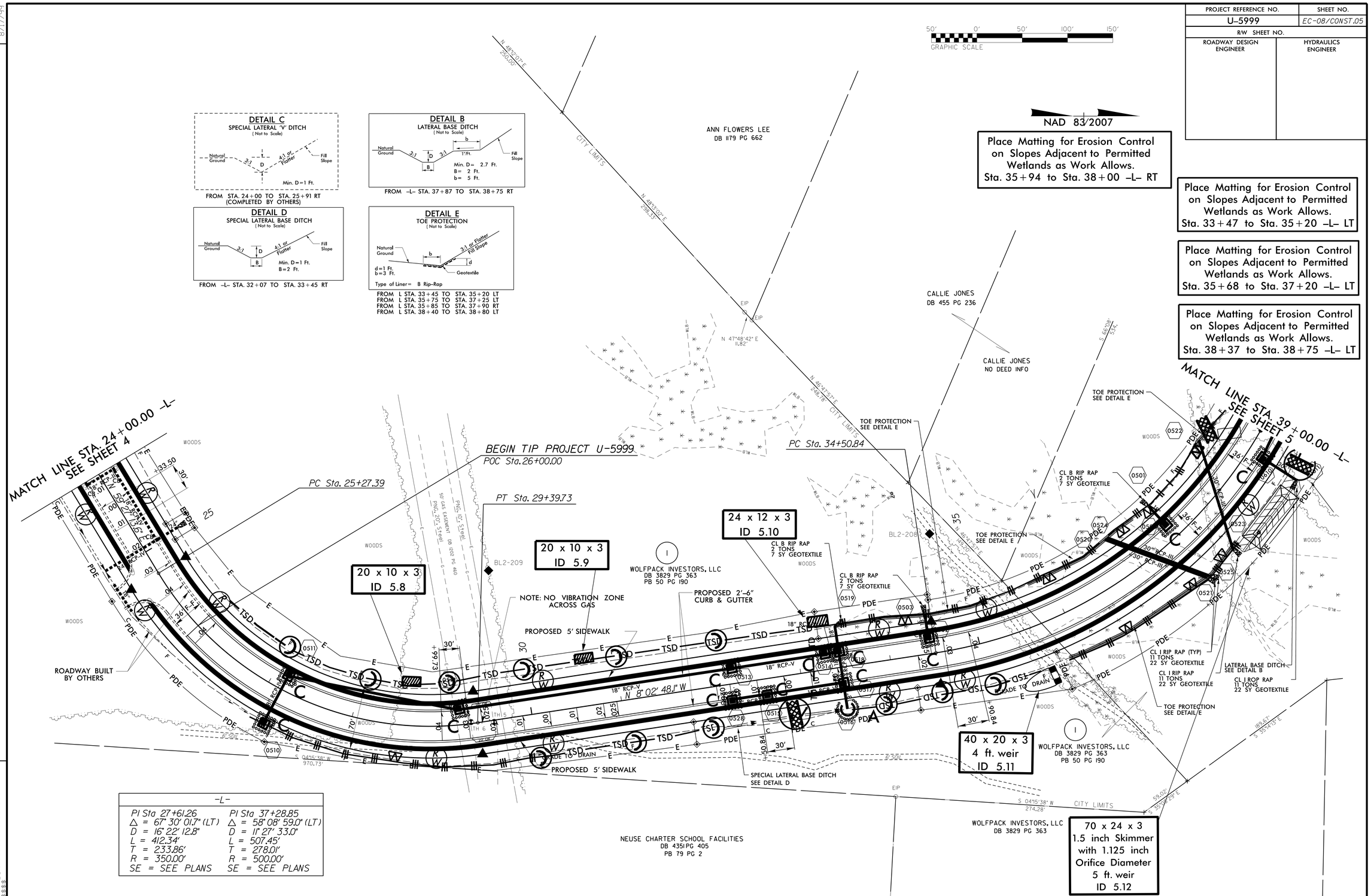

FINAL GRADE PLAN

$$$$SYSTIME$$$$
$$$$USERNAME$$$$

FINAL GRADE PLAN

PROJECT REFERENCE NO.	SHEET NO.
U-5999	EC-09/CONST.06
R/W SHEET NO.	
ROADWAY DESIGN ENGINEER	HYDRAULICS ENGINEER

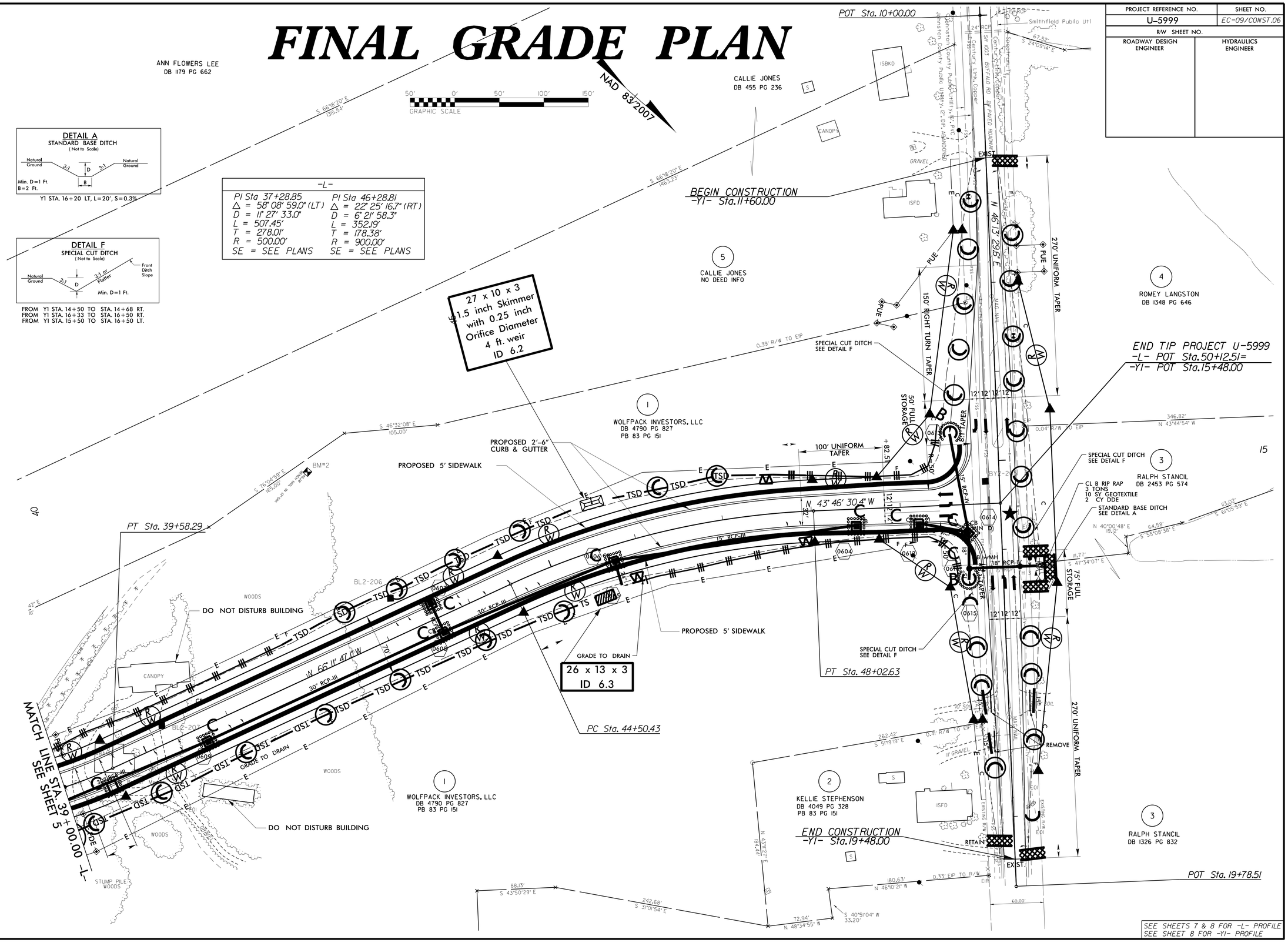

REVISIONS

8/17/99

15

TIP PROJECT: U-5999

STATE	STATE PROJECT REFERENCE NO.	SHEET NO.	TOTAL SHEETS
N.C.	U-5999	EC-1	

STATE PROJ. NO.	F.A. PROJ. NO.	DESCRIPTION

STATE OF NORTH CAROLINA
DIVISION OF HIGHWAYS

PLAN FOR PROPOSED
HIGHWAY EROSION CONTROL

JOHNSTON COUNTY

LOCATION: KELLIE DRIVE FROM BOOKER DAIRY ROAD (SR 1923) TO BUFFALO ROAD (SR1003)

TYPE OF WORK: GRADING, PAVING, DRAINAGE, AND SIGNAL

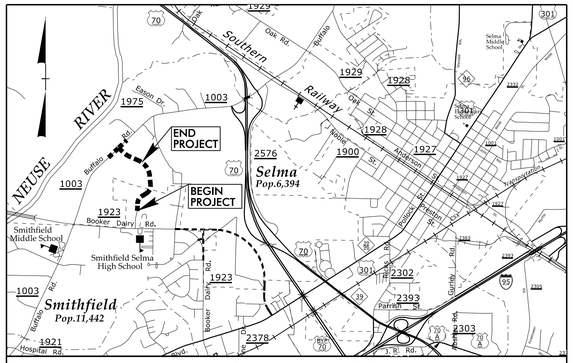

VICINITY MAP

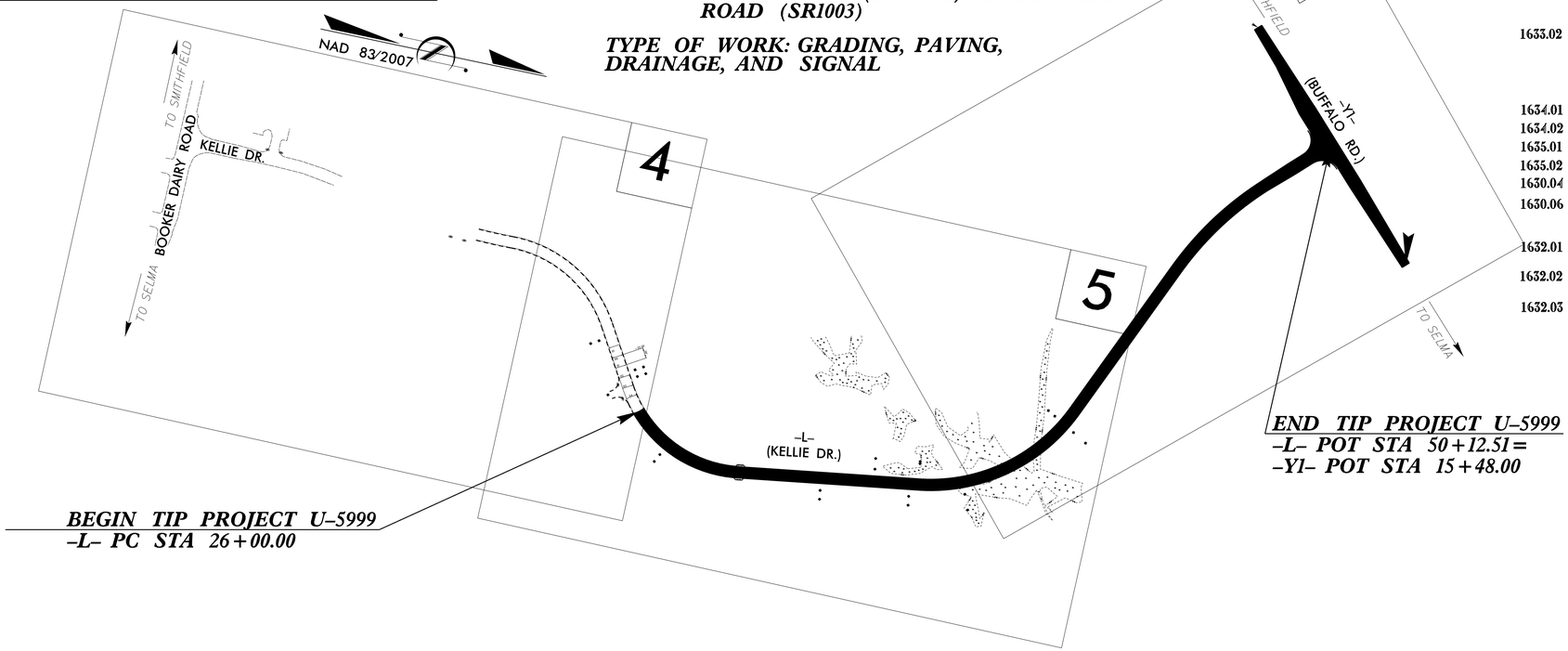

BEGIN TIP PROJECT U-5999
-L- PC STA 26+00.00

END TIP PROJECT U-5999
-L- POT STA 50+12.51 =
-Y1- POT STA 15+48.00

EROSION AND SEDIMENT CONTROL MEASURES

Std. #	Description	Symbol
1630.03	Temporary Silt Ditch	TSD
1630.05	Temporary Diversion	TD
1605.01	Temporary Silt Fence	
1606.01	Special Sediment Control Fence	
1622.01	Temporary Berms and Slope Drains	
1630.02	Silt Basin Type B	
1633.01	Temporary Rock Silt Check Type-A	
	Temporary Rock Silt Check Type-A with Matting and Polyacrylamide (PAM)	
1633.02	Temporary Rock Silt Check Type-B	
	Wattle / Coir Fiber Wattle	EW CFW
	Wattle / Coir Fiber Wattle with Polyacrylamide (PAM)	
1634.01	Temporary Rock Sediment Dam Type-A	
1634.02	Temporary Rock Sediment Dam Type-B	
1635.01	Rock Pipe Inlet Sediment Trap Type-A	
1635.02	Rock Pipe Inlet Sediment Trap Type-B	
1630.04	Stilling Basin	
1630.06	Special Stilling Basin	
	Rock Inlet Sediment Trap:	
1632.01	Type A	A
1632.02	Type B	B
1632.03	Type C	C
	Skimmer Basin	
	Tiered Skimmer Basin	
	Infiltration Basin	

THIS PROJECT CONTAINS EROSION CONTROL PLANS FOR CLEARING AND GRUBBING PHASE OF CONSTRUCTION.

THIS PROJECT HAS BEEN DESIGNED TO SENSITIVE WATERSHED STANDARDS.

GRAPHIC SCALE

0
PLANS

0
PROFILE (HORIZONTAL)

0
PROFILE (VERTICAL)

THESE EROSION AND SEDIMENT CONTROL PLANS COMPLY WITH THE REGULATIONS SET FORTH BY THE NCG-010000 GENERAL CONSTRUCTION PERMIT EFFECTIVE AUGUST 1, 2016 AND ISSUED BY THE NORTH CAROLINA DEPARTMENT OF ENVIRONMENTAL QUALITY DIVISION OF WATER RESOURCES.

Prepared in the Office of:

MI ENGINEERING
1011 SCHAUBE DRIVE, SUITE 100
RALEIGH, NC 27606

Designed by:

KAREN HEFNER, PE — ***3428***
NAME — *LEVEL III CERTIFICATION NO.*

Reviewed in the Office of:

ROADSIDE ENVIRONMENTAL UNIT
1 South Wilmington St.
Raleigh, NC 27611

2018 STANDARD SPECIFICATIONS

Reviewed by:

Noelle Ring, CPESC

Roadway Standard Drawings

The following roadway english standards as appear in "Roadway Standard Drawings"– Roadway Design Unit – N. C. Department of Transportation – Raleigh, N. C., dated January 2018 and the latest revison thereto are applicable to this project and by reference hereby are considered a part of these plans.

1604.01	Railroad Erosion Control Detail	1632.01	Rock Inlet Sediment Trap Type A
1605.01	Temporary Silt Fence	1632.02	Rock Inlet Sediment Trap Type B
1606.01	Special Sediment Control Fence	1632.03	Rock Inlet Sediment Trap Type C
1607.01	Gravel Construction Entrance	1633.01	Temporary Rock Silt Check Type A
1622.01	Temporary Berms and Slope Drains	1633.02	Temporary Rock Silt Check Type B
1630.01	Riser Basin	1634.01	Temporary Rock Sediment Dam Type A
1630.02	Silt Basin Type B	1634.02	Temporary Rock Sediment Dam Type B
1630.03	Temporary Silt Ditch	1635.01	Rock Pipe Inlet Sediment Trap Type A
1630.04	Stilling Basin	1635.02	Rock Pipe Inlet Sediment Trap Type B
1630.05	Temporary Diversion	1640.01	Coir Fiber Baffle
1630.06	Special Stilling Basin	1645.01	Temporary Stream Crossing
1631.01	Matting Installation		

PROJECT REFERENCE NO.	SHEET NO.
U-5999	EC-2
R/W SHEET NO.	
ROADWAY DESIGN ENGINEER	HYDRAULICS ENGINEER

SKIMMER BASIN WITH BAFFLES DETAIL (EAST)

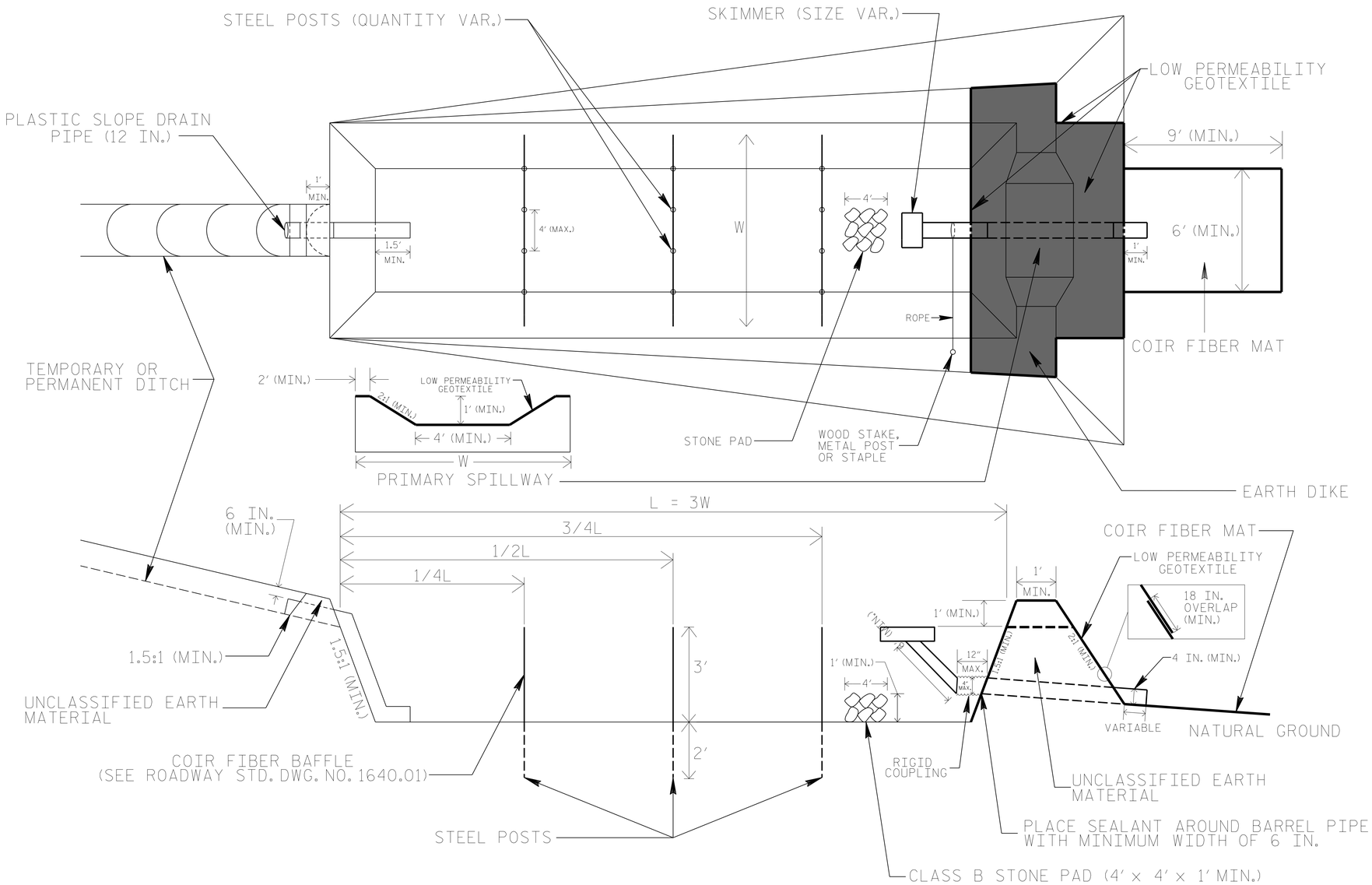

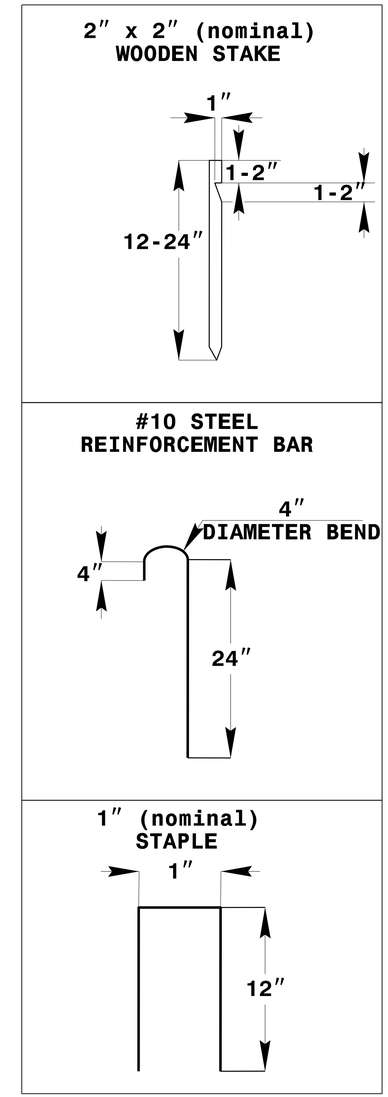

COIR FIBER MAT ANCHOR OPTIONS

NOTES

1. SEED AND PLACE MATTING FOR EROSION CONTROL ON INTERIOR AND EXTERIOR SIDESLOPES.
2. LIMIT EARTH DIKE HEIGHT TO 5 FT.
3. FOR BASIN DEPTH OF 3 FT., THE MINIMUM BASIN WIDTH SHALL BE 9 FT.
4. DETERMINE PRIMARY SPILLWAY WEIR LENGTH (FT.) USING Q/0.8, WHERE Q IS FLOW RATE (CFS) INTO BASIN.
5. PLASTIC SLOPE DRAIN PIPE AT INLET OF BASIN MAY BE REPLACED BY FILTRATION GEOTEXTILE OR TARP AS DIRECTED.
6. LOW PERMEABILITY GEOTEXTILE FOR PRIMARY SPILLWAY SHALL BE ONE CONTINUOUS PIECE OF MATERIAL OR OVERLAPPED 18 IN. (MIN.).

NOT TO SCALE

PROJECT REFERENCE NO.	SHEET NO.
U-5999	EC-2A
R/W SHEET NO.	
ROADWAY DESIGN ENGINEER	HYDRAULICS ENGINEER

COIR FIBER WATTLE WITH POLYACRYLAMIDE (PAM) DETAIL

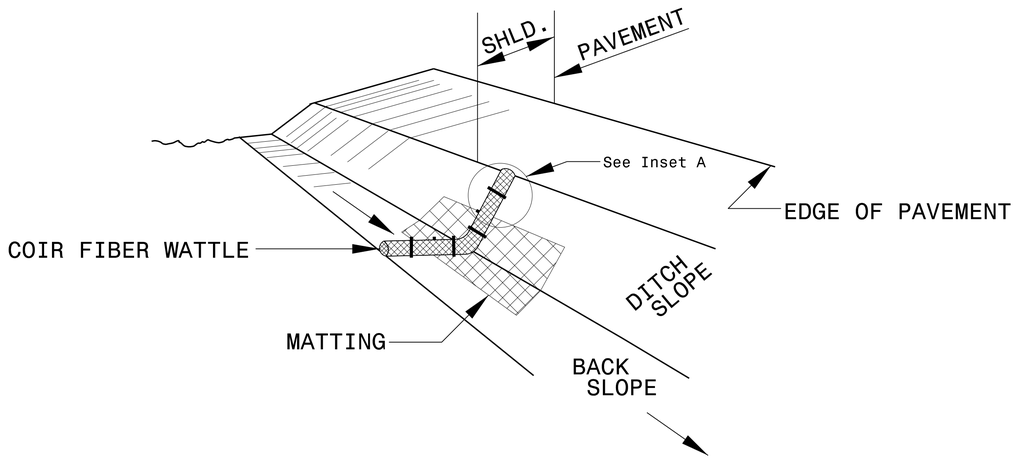

ISOMETRIC VIEW

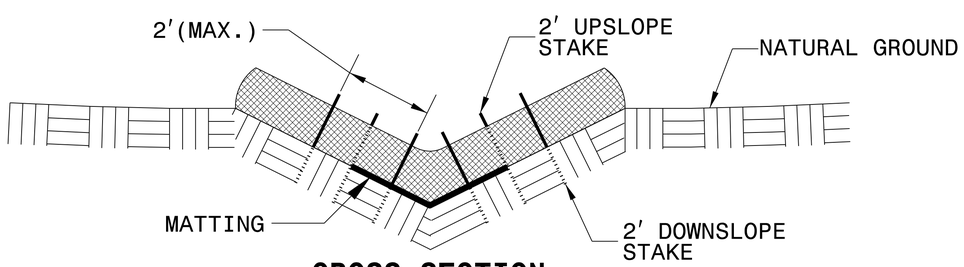

CROSS SECTION VEE DITCH

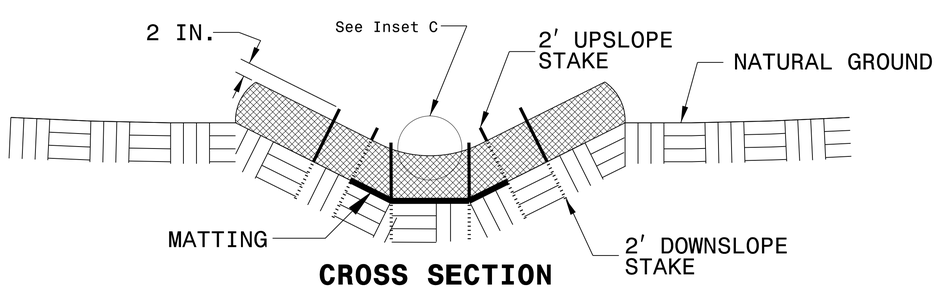

CROSS SECTION TRAPEZOIDAL DITCH

NOTES:

USE MINIMUM 12 IN. DIAMETER COIR FIBER (COCONUT FIBER) WATTLE.

USE 2 FT. WOODEN STAKES WITH A 2 IN. BY 2 IN. NOMINAL CROSS SECTION.

ONLY INSTALL WATTLE(S) TO A HEIGHT IN DITCH SO FLOW WILL NOT WASH AROUND WATTLE AND SCOUR DITCH SLOPES AND AS DIRECTED.

INSTALL A MINIMUM OF 2 UPSLOPE STAKES AND 4 DOWNSLOPE STAKES AT AN ANGLE TO WEDGE WATTLE TO BOTTOM OF DITCH.

PROVIDE STAPLES MADE OF 0.125 IN. DIAMETER STEEL WIRE FORMED INTO A U SHAPE NOT LESS THAN 12″ IN LENGTH.

INSTALL STAPLES APPROXIMATELY EVERY 1 LINEAR FOOT ON BOTH SIDES OF WATTLE AND AT EACH END TO SECURE IT TO THE SOIL.

INSTALL MATTING IN ACCORDANCE WITH SECTION 1631 OF THE STANDARD SPECIFICATIONS.

PRIOR TO POLYACRYLAMIDE (PAM) APPLICATION, OBTAIN A SOIL SAMPLE FROM PROJECT LOCATION, AND FROM OFFSITE MATERIAL, AND ANALYZE FOR APPROPRIATE PAM FLOCCULANT TO BE APPLIED TO EACH WATTLE.

INITIALLY APPLY 2 OUNCES OF ANIONIC OR NEUTRALLY CHARGED PAM OVER WATTLE WHERE WATER WILL FLOW AND 1 OUNCE OF PAM ON MATTING ON EACH SIDE OF WATTLE. REAPPLY PAM AFTER EVERY RAINFALL EVENT THAT IS EQUAL TO OR EXCEEDS 0.50 IN.

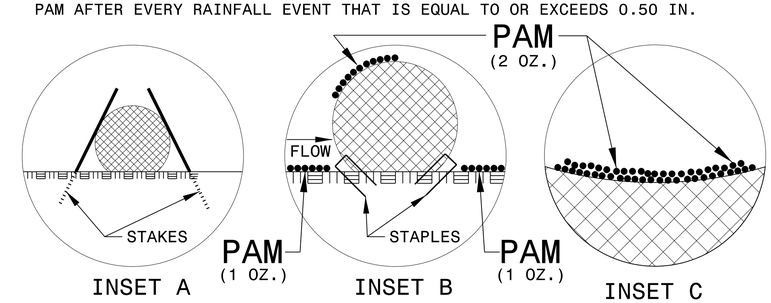

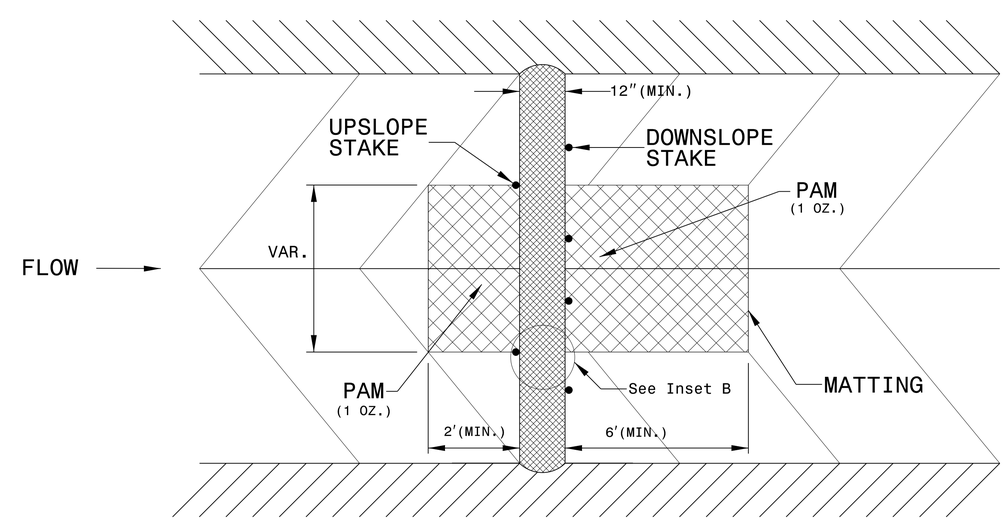

TOP VIEW

PROJECT REFERENCE NO.	SHEET NO.
U-5999	EC-2B
R/W SHEET NO.	
ROADWAY DESIGN ENGINEER	HYDRAULICS ENGINEER

TEMPORARY ROCK SILT CHECK TYPE 'A' WITH EXCELSIOR MATTING AND POLYACRYLAMIDE (PAM)

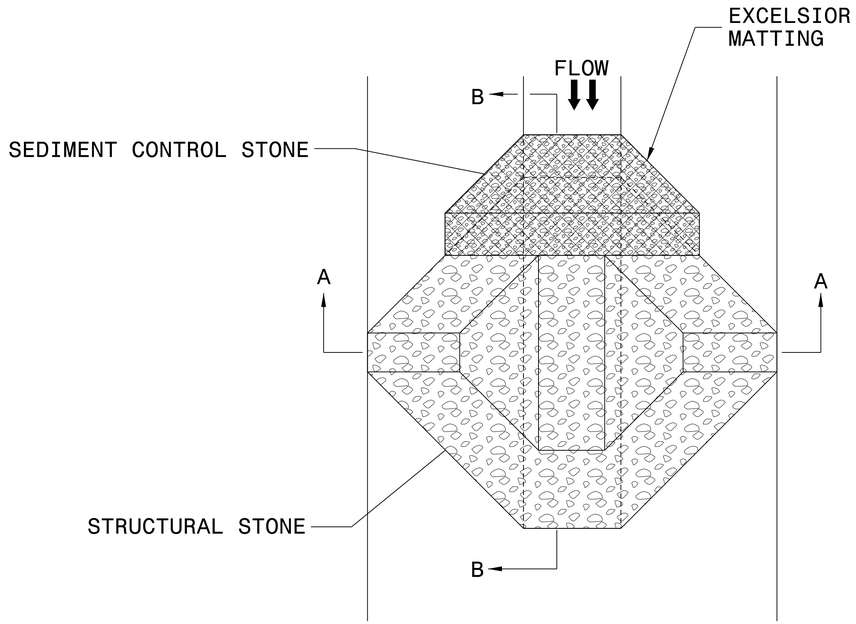

PLAN

NOTES:

INSTALL TEMPORARY ROCK SILT CHECK TYPE A IN ACCORDANCE WITH ROADWAY STANDARD DRAWING NO. 1633.01.

USE EXCELSIOR FOR MATTING MATERIAL AND ANCHOR MATTING SECTION AT TOP AND BOTTOM WITH CLASS B STONE.

PRIOR TO POLYACRYLAMIDE (PAM) APPLICATION, OBTAIN A SOIL SAMPLE FROM PROJECT LOCATION, AND FROM OFFSITE MATERIAL, AND ANALYZE FOR APPROPRIATE PAM FLOCCULANT TO BE APPLIED TO EACH ROCK SILT CHECK.

INITIALLY APPLY 4 OUNCES OF POLYACRYLAMIDE (PAM) TO TOP OF MATTING SECTION AND AFTER EVERY RAINFALL EVENT THAT EQUALS OR EXCEEDS 0.50 INCHES.

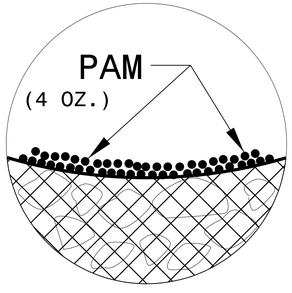

INSET A

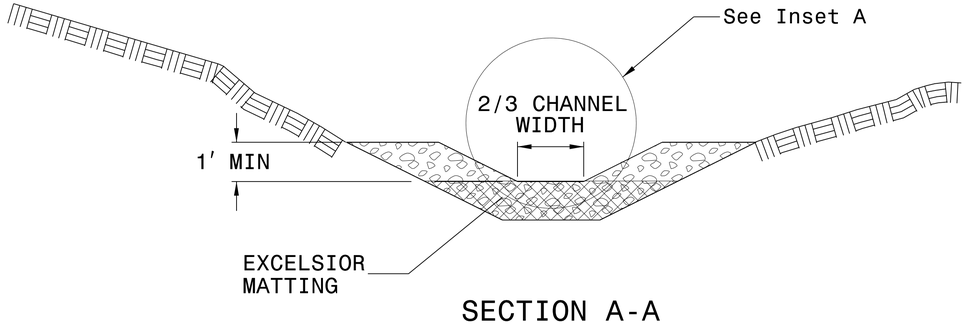

SECTION A-A

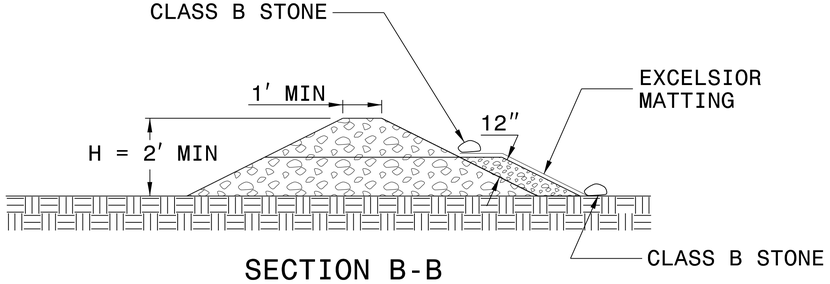

SECTION B-B

NOT TO SCALE

PROJECT REFERENCE NO.	SHEET NO.
U-5999	EC-3
ROADWAY DESIGN ENGINEER	HYDRAULICS ENGINEER

DIVISION OF HIGHWAYS
STATE OF NORTH CAROLINA

SOIL STABILIZATION SUMMARY SHEET

MATTING FOR EROSION CONTROL

CONST SHEET NO.	LINE	FROM STATION	TO STATION	SIDE	ESTIMATE (SY)
5	-L-	32+07	33+45	RT	25
5	-L-	37+87	38+75	RT	125
6	-Y1-	12+00	14+68	RT	95
6	-Y1-	16+00	19+00	RT	105
6	-Y1-	13+50	16+50	LT	90
6	-Y1-	17+00	18+00	LT	35
				SUBTOTAL	475
MISCELLANEOUS MATTING TO BE INSTALLED AS DIRECTED BY THE ENGINEER					4065
				TOTAL	4540
				SAY	4540

MATTING FOR EROSION CONTROL

CONST SHEET NO.	LINE	FROM STATION	TO STATION	SIDE	ESTIMATE (SY)

PROJECT REFERENCE NO.	SHEET NO.
U-5999	EC-3A
ROADWAY DESIGN ENGINEER	HYDRAULICS ENGINEER

DIVISION OF HIGHWAYS
STATE OF NORTH CAROLINA

SOIL STABILIZATION TIMEFRAMES

SITE DESCRIPTION	STABILIZATION TIME	TIMEFRAME EXCEPTIONS
PERIMETER DIKES, SWALES, DITCHES AND SLOPES	7 DAYS	NONE
HIGH QUALITY WATER (HQW) ZONES	7 DAYS	NONE
SLOPES STEEPER THAN 3:1	7 DAYS	IF SLOPES ARE 10' OR LESS IN LENGTH AND ARE NOT STEEPER THAN 2:1, 14 DAYS ARE ALLOWED.
SLOPES 3:1 OR FLATTER	14 DAYS	7 DAYS FOR SLOPES GREATER THAN 50' IN LENGTH.
ALL OTHER AREAS WITH SLOPES FLATTER THAN 4:1	14 DAYS	NONE, EXCEPT FOR PERIMETERS AND HQW ZONES.

PROJECT REFERENCE NO.	SHEET NO.
U-5999	EC-04/CONST.04
R/W SHEET NO.	
ROADWAY DESIGN ENGINEER	HYDRAULICS ENGINEER

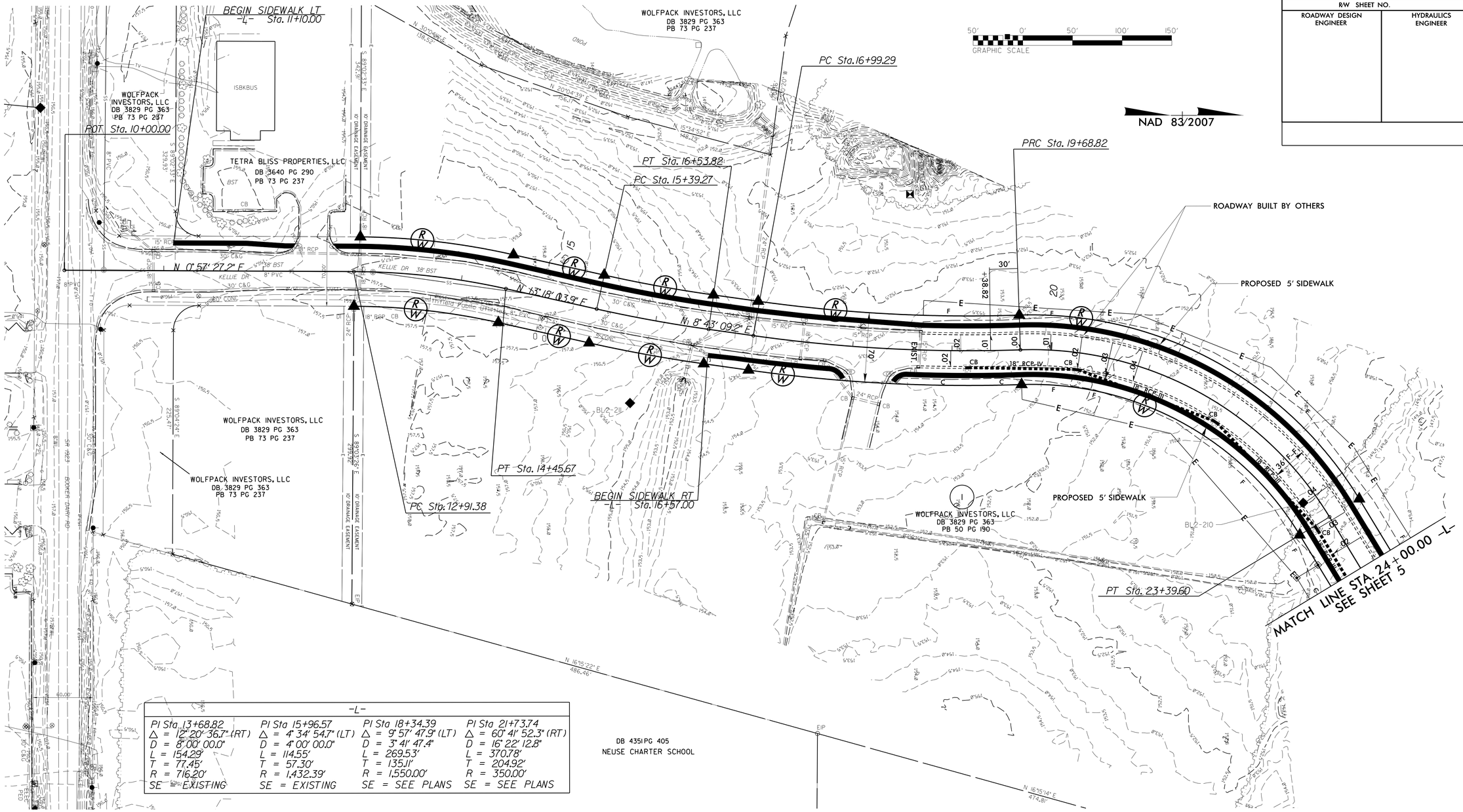

-L-			
PI Sta 13+68.82	PI Sta 15+96.57	PI Sta 18+34.39	PI Sta 21+73.74
Δ = 12° 20' 36.7" (RT)	Δ = 4° 34' 54.7" (LT)	Δ = 9° 57' 47.9" (LT)	Δ = 60° 41' 52.3" (RT)
D = 8° 00' 00.0"	D = 4° 00' 00.0"	D = 3° 41' 47.4"	D = 16° 22' 12.8"
L = 154.29'	L = 114.55'	L = 269.53'	L = 370.78'
T = 77.45'	T = 57.30'	T = 135.11'	T = 204.92'
R = 716.20'	R = 1,432.39'	R = 1,550.00'	R = 350.00'
SE = EXISTING	SE = EXISTING	SE = SEE PLANS	SE = SEE PLANS

CLEARING & GRUBBING PLAN

REVISIONS

8/17/99

$$$$$$$$SYSTIME$$$$$$
$$$$$$$$STEENAME$$$$EDON$$$$$$$$$$$$$$$$$$$$

SEE SHEETS 7 & 8 FOR -L- PROFILE

PROJECT REFERENCE NO.	SHEET NO.
U-5999	EC-05/CONST.05
R/W SHEET NO.	
ROADWAY DESIGN ENGINEER	HYDRAULICS ENGINEER

50' 0' 50' 100' 150'
GRAPHIC SCALE

NAD 83/2007

CLEARING AND GRUBBING
EROSION CONTROL FOR
CONSTRUCTION SHEET _5_

NOTE:
PLACE TEMPORARY ROCK SEDIMENT DAMS TYPE – B AND TEMPORARY ROCK SILT CHECKS TYPE – A AT DRAINAGE OUTLETS.

NOTE:
PERIMETER EROSION CONTROL MEASURES SHALL BE INSTALLED DURING CLEARING AND GRUBBING PHASE.

NOTE:
UTILIZE SPECIAL STILLING BASINS WHERE APPLICABLE.

INSTALL PIPE(S) IN JURISDICTIONAL AREAS WITHOUT IMPACTING STREAM UNTIL AREA STABILIZED AND ACCORDING TO NCDOT BEST MANAGEMENT PRACTICES FOR CONSTRUCTION AND MAINTENANCE ACTIVITIES MANUAL.

DETAIL C
SPECIAL LATERAL 'V' DITCH
(Not to Scale)

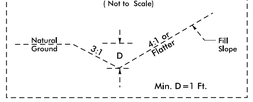

FROM STA. 24+00 TO STA. 25+91 RT
(COMPLETED BY OTHERS)

DETAIL B
LATERAL BASE DITCH
(Not to Scale)

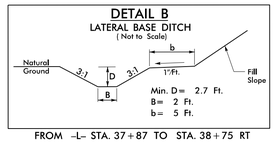

FROM –L– STA. 37+87 TO STA. 38+75 RT

DETAIL D
SPECIAL LATERAL BASE DITCH
(Not to Scale)

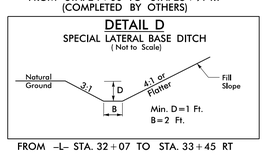

FROM –L– STA. 32+07 TO STA. 33+45 RT

DETAIL E
TOE PROTECTION
(Not to Scale)

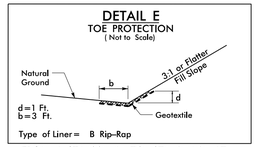

Type of Liner= B Rip-Rap

FROM L STA. 33+45 TO STA. 35+20 LT
FROM L STA. 35+75 TO STA. 37+25 LT
FROM L STA. 35+85 TO STA. 37+90 RT
FROM L STA. 38+40 TO STA. 38+80 LT

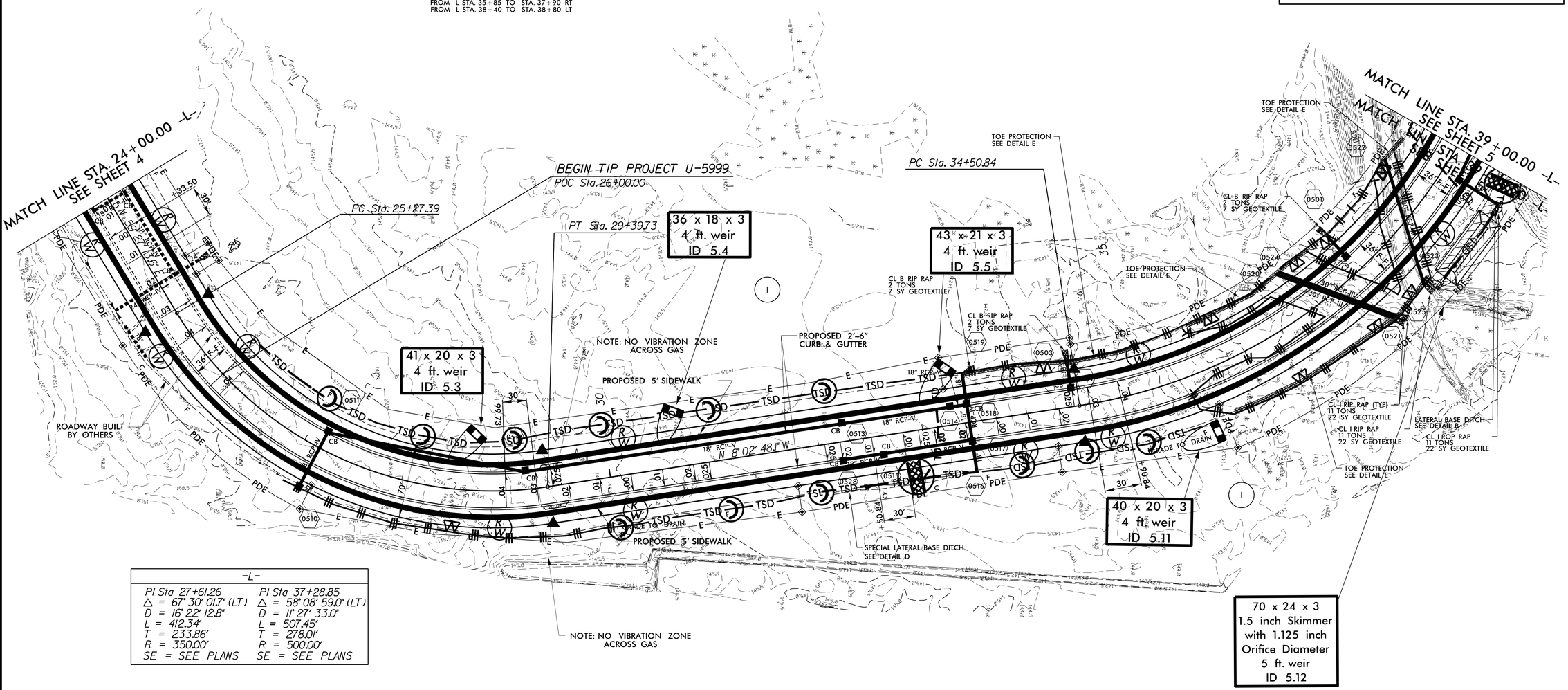

–L–	
PI Sta 27+61.26	PI Sta 37+28.85
△ = 67° 30' 01.7" (LT)	△ = 58° 08' 59.0" (LT)
D = 16° 22' 12.8"	D = 11° 27' 33.0"
L = 412.34'	L = 507.45'
T = 233.86'	T = 278.01'
R = 350.00'	R = 500.00'
SE = SEE PLANS	SE = SEE PLANS

CLEARING & GRUBBING PLAN

SEE SHEETS 7 & 8 FOR –L– PROFILE

REVISIONS

8/17/99

$$$$$SYSTIME$$$$
$$$$$

PROJECT REFERENCE NO.	SHEET NO.
U-5999	EC-05A/CONST.05
R/W SHEET NO.	
ROADWAY DESIGN ENGINEER	HYDRAULICS ENGINEER

PIPE CONSTRUCTION SEQUENCE STA. 38+13 –L–
(NTS)

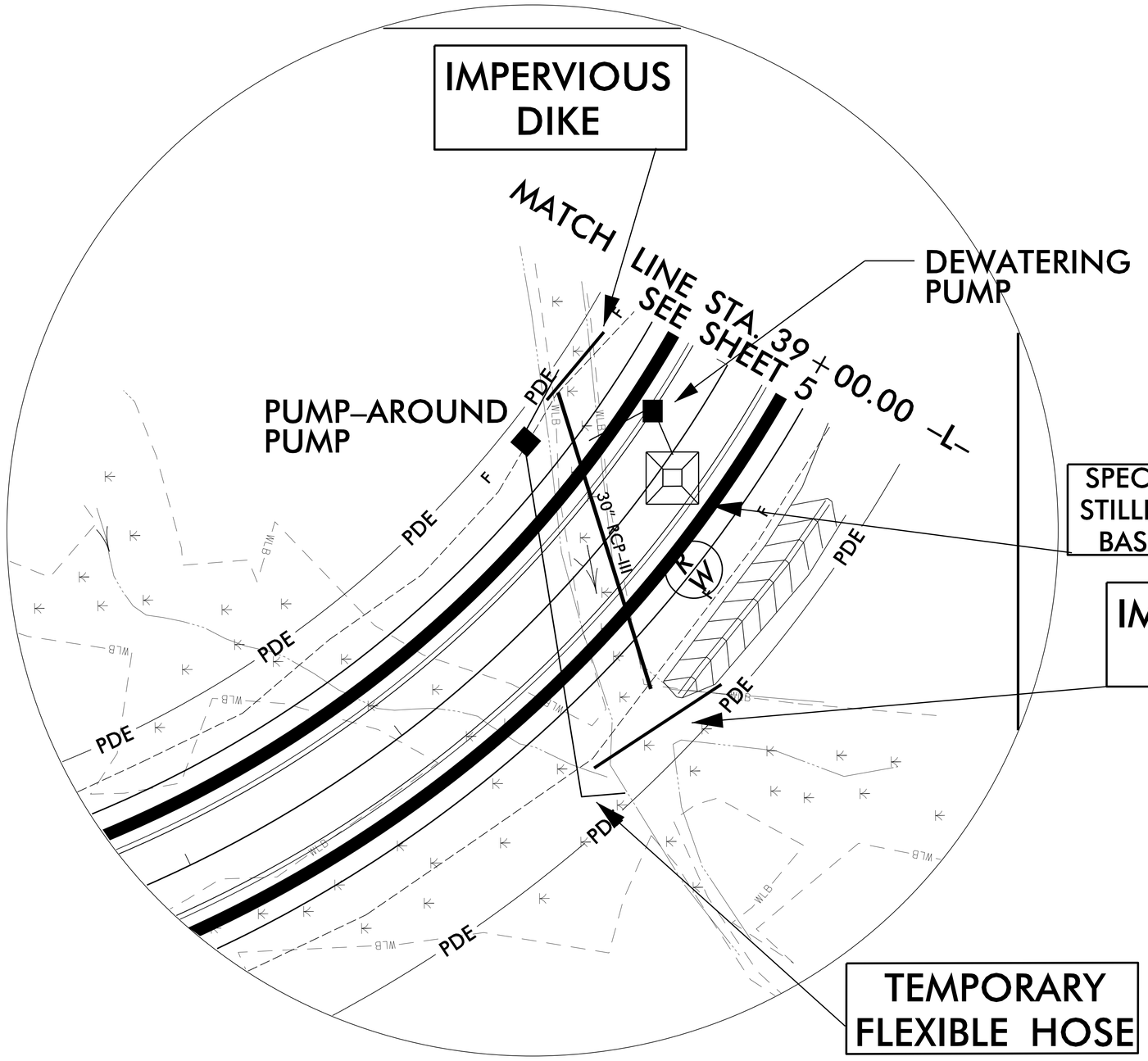

NOTES:

1. PIPE INSTALLATION SHALL BE PERFORMED IN ONLY DRY OR ISOLATED SECTIONS OF CHANNEL.

2. IMPERVIOUS DIKES ARE TO BE USED TO ISOLATE WORK FROM STREAM FLOW AS NECESSARY.

3. ALL GRADED AREAS TO BE STABILIZED WITHIN 24 HOURS.

4. MAINTENANCE OF STREAM FLOW OPERATIONS SHALL BE INCIDENTAL TO THE WORK. THIS INCLUDES POLYETHYLENE SHEETING, DIVERSION PIPES, PUMPS, AND HOSES.

5. PUMPS AND HOSES SHALL BE SUFFICIENT SIZE TO DEWATER THE WORK AREA.

6. THE CONTRACTOR SHALL NOT PUMP SEDIMENT–LADEN WATER DIRECTLY INTO THE STREAM. FOR DEWATERING OF PIPE SITE THE CONTRACTOR SHALL FILTER SEDIMENT–LADEN WATER THROUGH A STILLING BASIN AND/OR SPECIAL STILLING BASIN.

7. UTILIZE A STABILIZED OUTLET INSTEAD OF A SPECIAL STILLING BASIN IF PUMPING CLEAN WATER.

SEQUENCE OF CONSTRUCTION FOR TYPICAL WORK AREA:

1. INSTALL SPECIAL STILLING BASIN(S).

2. INSTALL UPSTREAM PUMP AND TEMPORARY FLEXIBLE HOSE.

3. PLACE UPSTREAM IMPERVIOUS DIKE AND BEGIN PUMPING OPERATIONS.

4. PLACE DOWNSTREAM IMPERVIOUS DIKE AND PUMPING APPARATUS. DEWATER ENTRAPPED AREA. AREA TO BE DEWATERED SHALL BE EQUAL TO ONE DAY'S WORK.

5. INSTALL 30" RCP–III IN ACCORDANCE WITH THE PLANS.

6 EXCAVATE ANY ACCUMULATED SILT AND DEWATER BEFORE REMOVAL OF IMPERVIOUS DIKES. REMOVE IMPERVIOUS DIKES, PUMPS, AND TEMPORARY FLEXIBLE HOSE. (DOWNSTREAM IMPERVIOUS DIKES FIRST).

7. REMOVE SPECIAL STILLING BASIN(S) AND BACKFILL. STABILIZE DISTURBED AREA WITH SEED & MULCH.

CLEARING & GRUBBING PLAN

PROJECT REFERENCE NO.	SHEET NO.
U-5999	EC-06/CONST.06
R/W SHEET NO.	
ROADWAY DESIGN ENGINEER	HYDRAULICS ENGINEER

NOTE:
PERIMETER EROSION CONTROL MEASURES SHALL BE INSTALLED DURING CLEARING AND GRUBBING PHASE.

CLEARING AND GRUBBING EROSION CONTROL FOR CONSTRUCTION SHEET _6_

NOTE:
PLACE TEMPORARY ROCK SEDIMENT DAMS TYPE – B AND TEMPORARY ROCK SILT CHECKS TYPE – A AT DRAINAGE OUTLETS.

NAD 83/2007

DETAIL A
STANDARD BASE DITCH
(Not to Scale)

Natural Ground, 3:1, D, 3:1, Natural Ground; B
Min. D=1 Ft.
B=2 Ft.

Y1 STA. 16+20 LT, L=20', S=0.3%

DETAIL F
SPECIAL CUT DITCH
(Not to Scale)

Natural Ground, 3:1, D, 3:1 or Flatter, Front Ditch Slope
Min. D=1 Ft.

FROM Y1 STA. 14+50 TO STA. 14+68 RT.
FROM Y1 STA. 16+33 TO STA. 16+50 RT.
FROM Y1 STA. 15+50 TO STA. 16+50 LT.

-L-	
PI Sta 37+28.85	PI Sta 46+28.81
△ = 58° 08' 59.0" (LT)	△ = 22° 25' 16.7" (RT)
D = 11° 27' 33.0"	D = 6° 21' 58.3"
L = 507.45'	L = 352.19'
T = 278.01'	T = 178.38'
R = 500.00'	R = 900.00'
SE = SEE PLANS	SE = SEE PLANS

ANN FLOWERS LEE
DB 1179 PG 662

CALLIE JONES
DB 455 PG 236

CALLIE JONES
NO DEED INFO

ROMEY LANGSTON
DB 1348 PG 646

WOLFPACK INVESTORS, LLC
DB 4790 PG 827
PB 83 PG 151

RALPH STANCIL
DB 2453 PG 574

KELLIE STEPHENSON
DB 4049 PG 328
PB 83 PG 151

RALPH STANCIL
DB 1326 PG 832

38 x 18 x 3
1.5 inch Skimmer
with 0.625 inch
Orifice Diameter
4 ft. weir
ID 6.1

38 x 18 x 3
1.5 inch Skimmer
with 0.625 inch
Orifice Diameter
4 ft. weir
ID 6.6

POT Sta. 10+00.00

BEGIN CONSTRUCTION
-Y1- Sta.11+60.00

END TIP PROJECT U-5999
-L- POT Sta.50+12.51=
-Y1- POT Sta.15+48.00

END CONSTRUCTION
-Y1- Sta.19+48.00

POT Sta. 19+78.51

PT Sta. 39+58.29

PT Sta. 48+02.63

PC Sta. 44+50.43

MATCH LINE STA. 39+00.00 -L-
SEE SHEET 5

N 46° 13' 29.6" E

N 43° 46' 30.4" W

N 66° 11' 47" W

150' RIGHT TURN TAPER

100' UNIFORM TAPER

270' UNIFORM TAPER

8:1 TAPER

50' FULL STORAGE

75' FULL STORAGE

PROPOSED 2'-6" CURB & GUTTER

PROPOSED 5' SIDEWALK

GRADE TO DRAIN

DO NOT DISTURB BUILDING

SPECIAL CUT DITCH
SEE DETAIL F

CL B RIP RAP
3 TONS
10 SY GEOTEXTILE
2 CY DDE

STANDARD BASE DITCH
SEE DETAIL A

REMOVE

RETAIN

EXIST. EASEMENT

GRAPHIC SCALE

SEE SHEETS 7 & 8 FOR -L- PROFILE
SEE SHEET 8 FOR -Y1- PROFILE

REVISIONS

8/17/99

PROJECT REFERENCE NO.	SHEET NO.
U-5999	EC-07/CONST.04
R/W SHEET NO.	
ROADWAY DESIGN ENGINEER	HYDRAULICS ENGINEER

REVISIONS

8/17/99

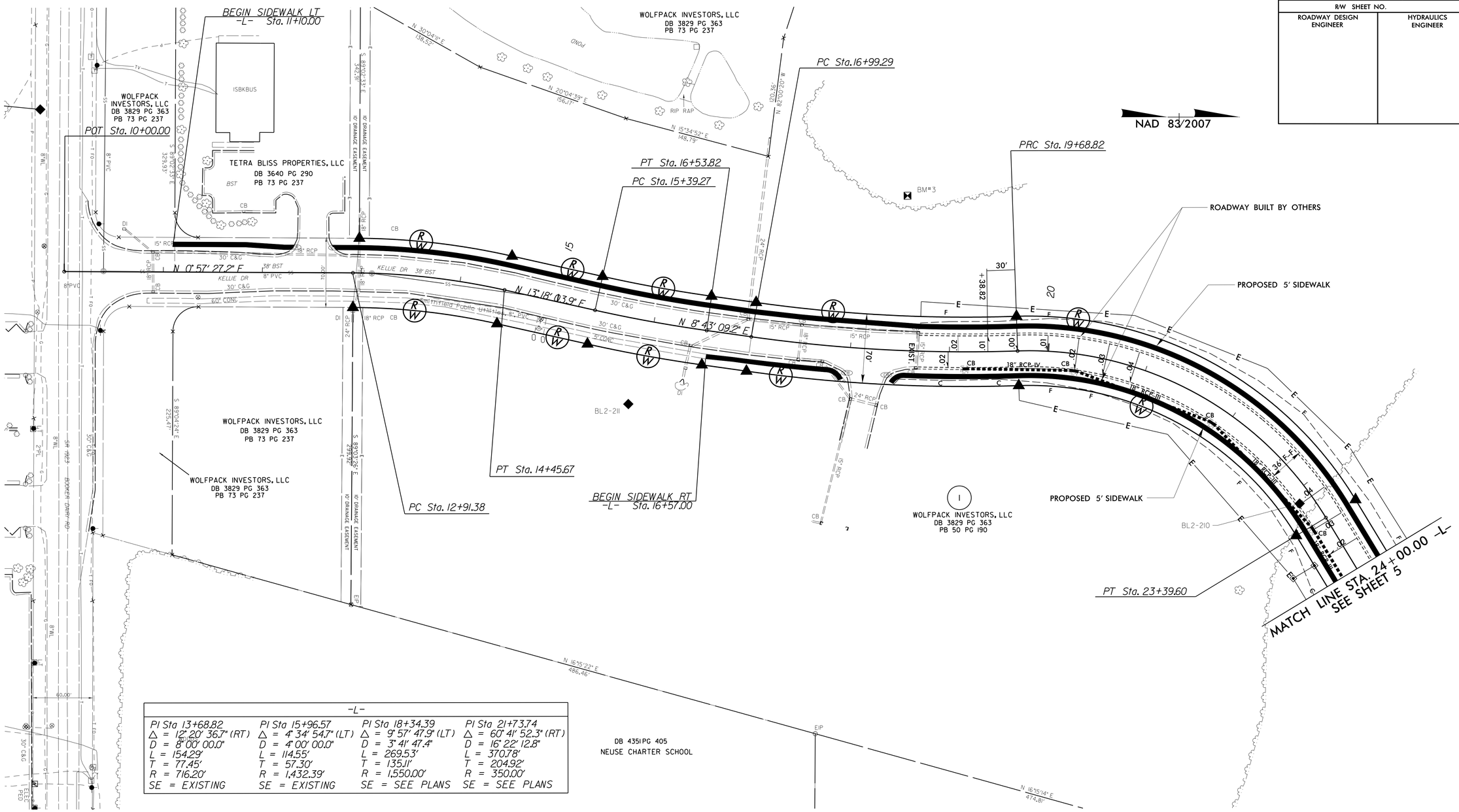

-L-			
PI Sta 13+68.82	PI Sta 15+96.57	PI Sta 18+34.39	PI Sta 21+73.74
Δ = 12° 20' 36.7" (RT)	Δ = 4° 34' 54.7" (LT)	Δ = 9° 57' 47.9" (LT)	Δ = 60° 41' 52.3" (RT)
D = 8° 00' 00.0"	D = 4° 00' 00.0"	D = 3° 41' 47.4"	D = 16° 22' 12.8"
L = 154.29'	L = 114.55'	L = 269.53'	L = 370.78'
T = 77.45'	T = 57.30'	T = 135.11'	T = 204.92'
R = 716.20'	R = 1,432.39'	R = 1,550.00'	R = 350.00'
SE = EXISTING	SE = EXISTING	SE = SEE PLANS	SE = SEE PLANS

FINAL GRADE PLAN

SEE SHEETS 7 & 8 FOR -L- PROFILE

$$$$$$$$SYSTIME$$$$$$
$$$$$$$$SYSTEDIT$$$$$$
$$$$$$$$SYSTEDON$$$$$$
$$$$$$$$SYSTENAME$$$$$$

PROJECT REFERENCE NO.	SHEET NO.
U-5999	EC-08/CONST.05
R/W SHEET NO.	
ROADWAY DESIGN ENGINEER	HYDRAULICS ENGINEER

REVISIONS

8/17/99

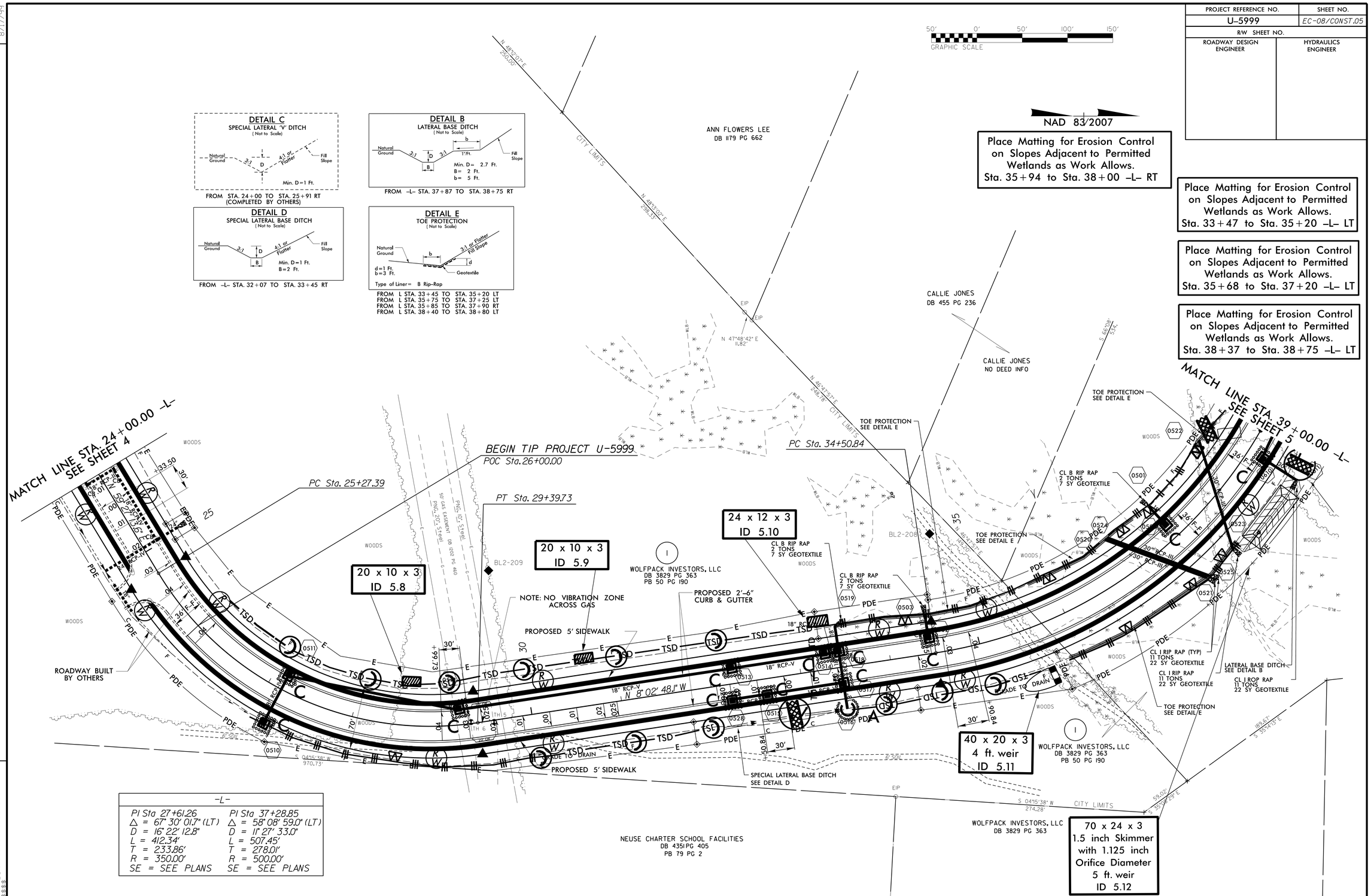

FINAL GRADE PLAN

$$$$SYSTIME$$$$
$$$$USERNAME$$$$

FINAL GRADE PLAN

PROJECT REFERENCE NO.	SHEET NO.
U-5999	EC-09/CONST.06
R/W SHEET NO.	
ROADWAY DESIGN ENGINEER	HYDRAULICS ENGINEER

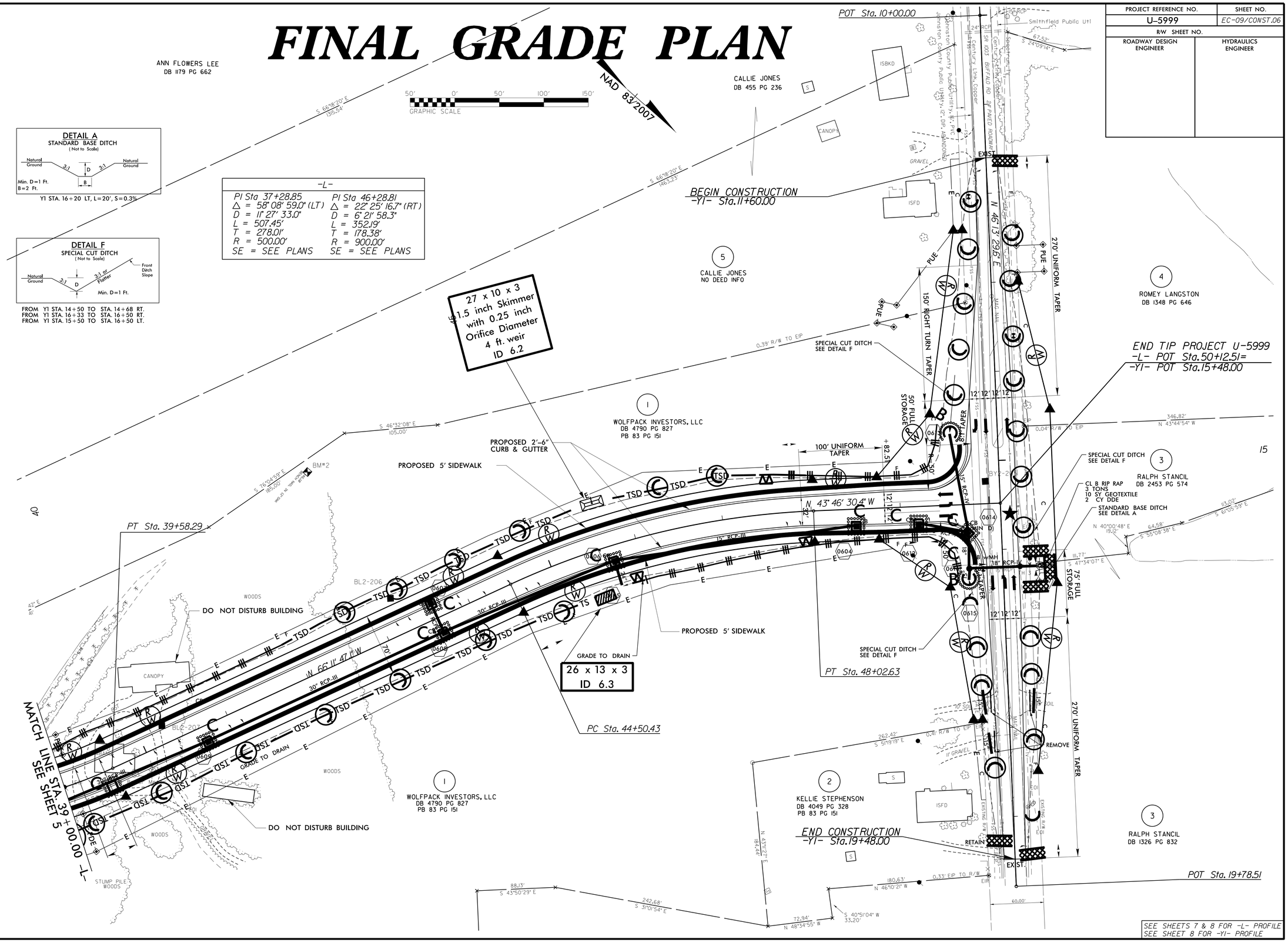

REVISIONS

8/17/99

15

DocuSign Envelope ID: DC197EF1-CB13-449E-B732-E7D066DC8058

Project No.	Sheet No.
U–5999	SIG–1.0

STATE OF NORTH CAROLINA
DIVISION OF HIGHWAYS

JOHNSTON COUNTY

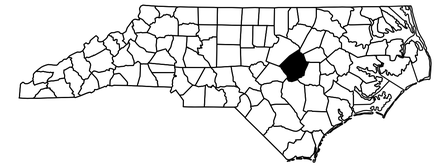

LOCATION: KELLIE DRIVE FROM SR 1923 (BOOKER DAIRY ROAD) TO SR 1003 (BUFFALO ROAD)

TYPE OF WORK: TRAFFIC SIGNALS

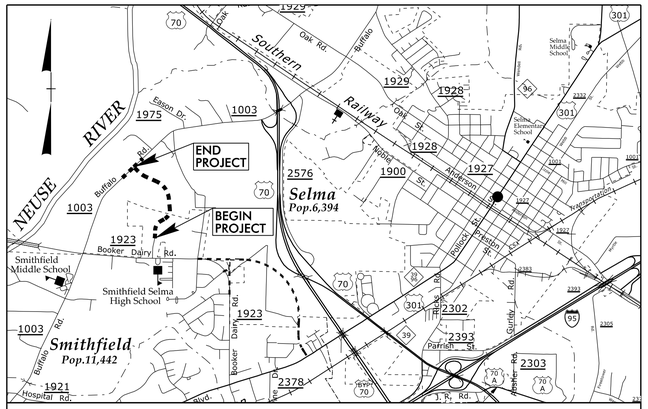

VICINITY MAP

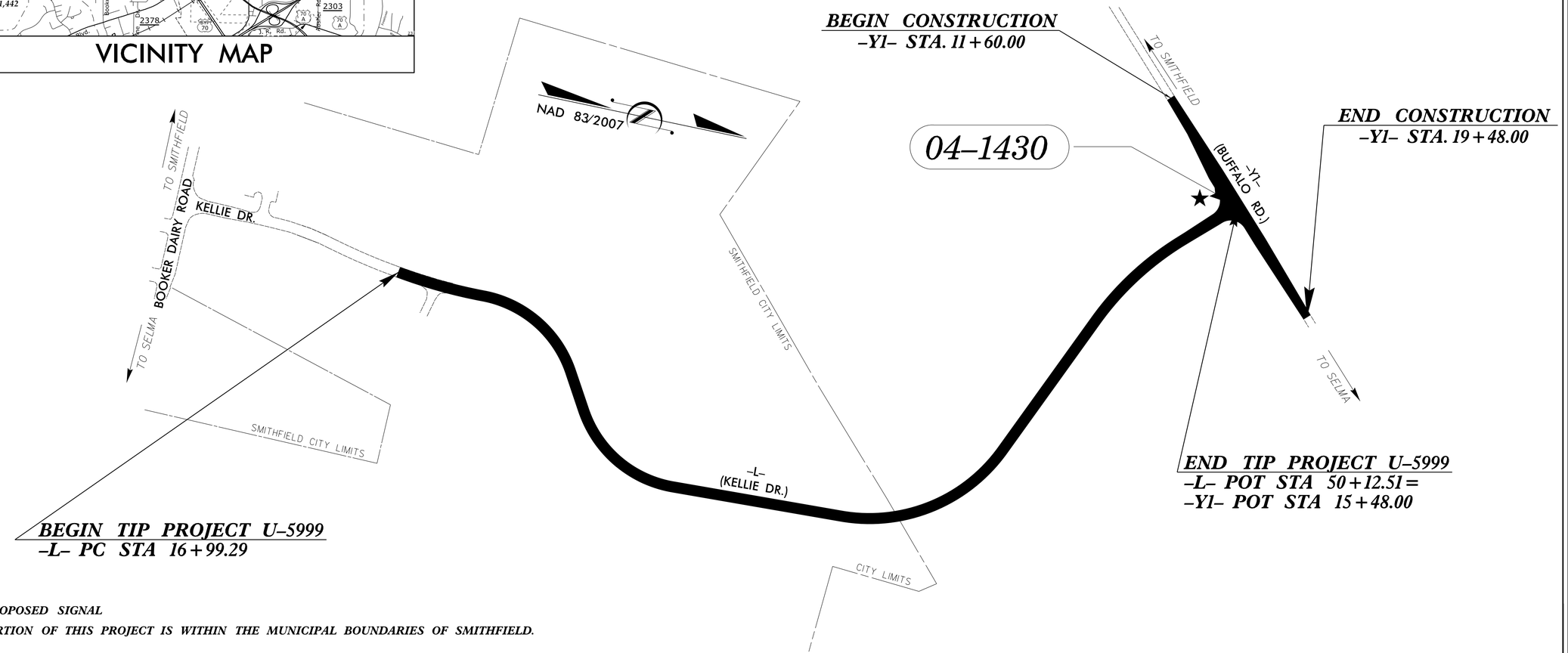

★ PROPOSED SIGNAL

A PORTION OF THIS PROJECT IS WITHIN THE MUNICIPAL BOUNDARIES OF SMITHFIELD.

TIP PROJECT: U–5999

CONTRACT: DD00240

Index of Plans

SIG. 1.0		TITLE SHEET
SIG. 2.0–2.2	04–1430	SR 1003 (BUFFALO ROAD) @ KELLIE DRIVE
SIG. M1–M8		METAL POLE STANDARD DRAWINGS

LEGEND

(XX–XXXX) – SIGNAL INVENTORY NUMBER

INTELLIGENT TRANSPORTATION AND SIGNALS UNIT
Contacts:

Zachary M. Little, PE
Signals Engineer, Eastern Region

Todd Joyce, PE
Signal Equipment Design Review Engineer

I. Neil Avery
Signal Communications Project Engineer

Heidi Berggren, EI
Signal Communications Project Design Engineer

Plans Prepared for:
DIVISION OF HIGHWAYS
TRANSPORTATION MOBILITY AND SAFETY DIVISION
Transportation Mobility and Safety Division · ITS and Signals Unit · State of North Carolina · Department of Transportation
750 N. Greenfield Parkway, Garner, NC 27529

Stantec
Stantec Consulting Services Inc.
801 Jones Franklin Rd-Suite 300
Raleigh, NC 27606
Tel. 919.851.6866
Fax. 919.851.7024
www.stantec.com
License No. F-0672

Regina M. Muncey, PE
Transportation Engineer

Dean Harris
Senior Transportation Engineer

Mark Kranz, PE, PTOE
Transportation Engineer

APPROVED: DocuSigned by: Regina M. Muncey
C7FE51B52245414...
DATE: 1/10/2018

NORTH CAROLINA PROFESSIONAL SEAL 043239 ENGINEER REGINA M. MUNCEY

09/08/99

U:\7100854\transportation\U5999\Traffic\Signals\Design\Titlesheet\U5999_Signal Title Sheet.dgn
User:rmuncey

DocuSign Envelope ID: DC197EF1-CB13-449E-B732-E7D066DC8058

PROJECT REFERENCE NO.	SHEET NO.
U-5999	SIG 2.2

LOGICAL I/O PROCESSOR PROGRAMMING DETAIL
TO PRODUCE SPECIAL FYA-PPLT SIGNAL SEQUENCE

(program controller as shown below)

1. FROM MAIN MENU PRESS '2' (PHASE CONTROL), THEN '1' (PHASE CONTROL FUNCTIONS). SCROLL TO THE BOTTOM OF THE MENU AND ENABLE ACT LOGIC COMMANDS 1, 2, AND 3.

2. FROM MAIN MENU PRESS '6' (OUTPUTS), THEN '3' (LOGICAL I/O PROCESSOR).

```
LOGICAL I/O COMMAND #1  (+/-COMMAND#)
IF  ACTIVE PHASE       #1  IS ON
AND RED CLEAR ON PHASE #1  IS ON

              SCROLL DOWN

THEN:
SET OUTPUT  ASSIGNMENT #50 ON
SET OUTPUT  ASSIGNMENT #51 OFF
```

NOTE: LOGIC FOR PHASE 1 RED CLEAR WHEN TRANSITIONING FROM PHASE 1 TO PHASE 2 (HEAD 11).

PRESS '+'

```
LOGICAL I/O COMMAND #2  (+/-COMMAND#)
IF  ACTIVE PHASE       #1  IS ON

              SCROLL DOWN

THEN:
SET OUTPUT  ASSIGNMENT #52 OFF
```

NOTE: LOGIC FOR SWITCHING FLASHING YELLOW ARROW "OFF" DURING PHASE 1 (HEAD 11).

PRESS '+'

```
LOGICAL I/O COMMAND #3  (+/-COMMAND#)
IF  YELLOW ON PHASE    #1  IS ON

              SCROLL DOWN

THEN:
SET OUTPUT  ASSIGNMENT #51 ON
```

NOTE: LOGIC FOR YELLOW ARROW CLEARANCE FROM PHASE 1 (HEAD 11).

END PROGRAMMING

OUTPUT REFERENCE SCHEDULE

OUTPUT 50 = Overlap A Red
OUTPUT 51 = Overlap A Yellow
OUTPUT 52 = Overlap A Green

OVERLAP PROGRAMMING DETAIL

(program controller as shown below)

FROM MAIN MENU PRESS '8' (OVERLAPS), THEN '1' (VEHICLE OVERLAP SETTINGS).

```
PAGE 1: VEHICLE OVERLAP 'A' SETTINGS
PHASE:          |123456789101112131415 16
VEH OVL PARENTS:|XX
VEH OVL NOT VEH:|
VEH OVL NOT PED:|
VEH OVL GRN EXT:|
STARTUP COLOR: _ RED  _ YELLOW  _ GREEN
FLASH COLORS:  _ RED  _ YELLOW  X GREEN
SELECT VEHICLE OVERLAP OPTIONS:   (Y/N)
FLASH YELLOW IN CONTROLLER FLASH?...Y
GREEN EXTENSION (0-255 SEC)........0
YELLOW CLEAR (0=PARENT,3-25.5 SEC)..0.0
RED CLEAR (0=PARENT,0.1-25.5 SEC)...0.0
OUTPUT AS PHASE # (0=NONE, 1-16)....0
```

← NOTICE GREEN FLASH

"END PROGRAMMING"

THIS ELECTRICAL DETAIL IS FOR
THE SIGNAL DESIGN: 04-1430
DESIGNED: DEC 2017
SEALED: 1-10-2018
REVISED:

New Installation
Electrical Details-Sheet 2 of 2

DOCUMENT NOT CONSIDERED FINAL UNLESS ALL SIGNATURES COMPLETED

Stantec

Stantec Consulting Services Inc.
801 Jones Franklin Road-Suite 300
Raleigh, NC 27606
Tel. (919) 851-6866
Fax. (919) 851-7024
www.stantec.com
License No. F-0672

Prepared in the Offices of:
Transportation Mobility and Safety Division
STATE OF NORTH CAROLINA DEPARTMENT OF TRANSPORTATION
Signals Management Section
750 N.Greenfield Pkwy,Garner,NC 27529

SR 1003 (Buffalo Road)
at
Kellie Drive

Division 04 Johnston County Smithfield

PLAN DATE:	December 2017	REVIEWED BY:	R. M. MUNCEY
PREPARED BY:	M. KIAEE	REVIEWED BY:	D. HARRIS

REVISIONS	INIT.	DATE

NORTH CAROLINA PROFESSIONAL SEAL 043239 ENGINEER REGINA M. MUNCEY

DocuSigned by:
Regina M. Muncey
C7FE51B622454FA...
SIGNATURE 1/10/2018 DATE

SIG. INVENTORY NO. 04-1430

DATE:
USER:
U:\Mkt\170018549\Transportation\MU5999\Traffic\Signals\Design\Signals\Electrical Details\u-5999_ele_dtl.dgn
User:rmuncey

DocuSign Envelope ID: DC197EF1-CB13-449E-B732-E7D066DC8058

PROJECT REFERENCE NO.	SHEET NO.
U-5999	SIG 2.0

PHASING DIAGRAM

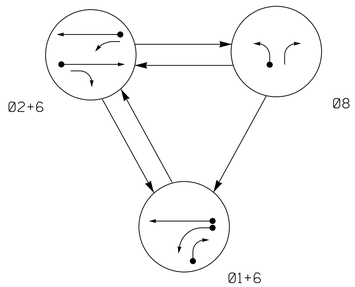

PHASING DIAGRAM DETECTION LEGEND

- DETECTED MOVEMENT
- UNDETECTED MOVEMENT (OVERLAP)
- UNSIGNALIZED MOVEMENT
- PEDESTRIAN MOVEMENT

TABLE OF OPERATION

SIGNAL FACE	PHASE 01+6	PHASE 02+6	PHASE 08	FLASH
11	←	←F Y	←R	←Y
21, 22	R	G	R	Y
61, 62	G	G	R	Y
81	R	R	G	R
82	R/→	R	G	R

SIGNAL FACE I.D.

All Heads L.E.D.

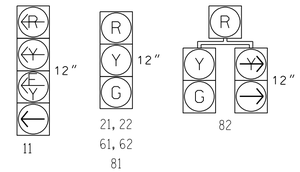

OASIS 2070 LOOP & DETECTOR INSTALLATION CHART

INDUCTIVE LOOPS					DETECTOR PROGRAMMING							
LOOP	SIZE (FT)	DISTANCE FROM STOPBAR (FT)	TURNS	NEW LOOP	PHASE	CALLING	EXTENSION	FULL TIME DELAY	STRETCH TIME	DELAY TIME	SYSTEM LOOP	NEW CARD
1A	6X40	0	2-4-2	Y	1	Y	Y	-	-	15	-	Y
					6	Y	Y	Y	-	3	-	Y
1B	6X40	0	2-4-2	Y	1	Y	Y	-	-	15	-	Y
2A/S2	6X6	300	5	Y	2	Y	Y	-	-	-	Y	Y
6A/S1	6X6	300	4	Y	6	Y	Y	-	-	-	Y	Y
8A	6X40	0	2-4-2	Y	8	Y	Y	-	-	3	-	Y

3 Phase
Fully Actuated
(SR 1923 (Booker Dairy Rd.) CLS)

NOTES

1. Refer to "Roadway Standard Drawings NCDOT" dated January 2018 and "Standard Specifications for Roads and Structures" dated January 2018.
2. Do not program signal for late night flashing operation unless otherwise directed by the Engineer.
3. Phase 1 may be lagged.
4. Set all detector units to presence mode.
5. Locate new cabinet so as not to obstruct sight distance of vehicles turning right on red.
6. Closed loop system data: Controller Asset #1430.

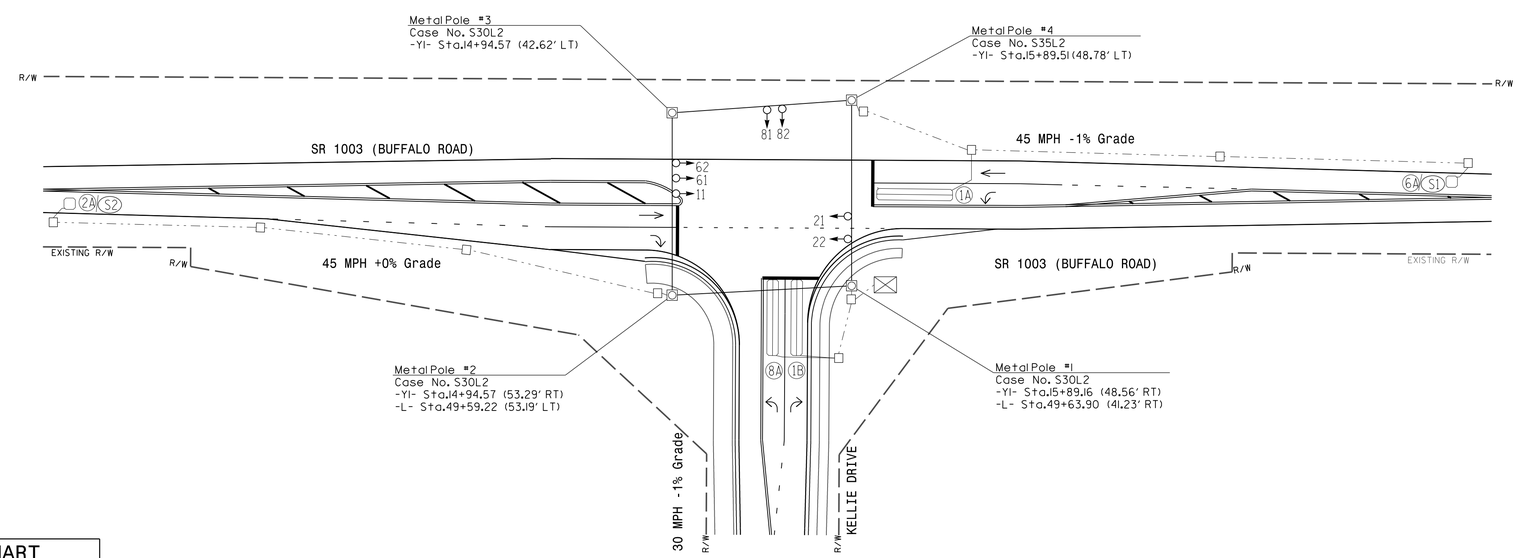

LEGEND

PROPOSED		EXISTING
	Traffic Signal Head	
	Modified Signal Head	N/A
	Sign	
	Pedestrian Signal Head With Push Button & Sign	
	Type I Pushbutton Post	
	Type II Signal Pedestal	
	Signal Pole with Guy	
	Signal Pole with Sidewalk Guy	
	Inductive Loop Detector	
	Controller & Cabinet	
	Junction Box	
	2-in Underground Conduit	
N/A	Right of Way	
	Directional Arrow	
	Metal Strain Pole	

OASIS 2070 TIMING CHART

FEATURE	PHASE 1	PHASE 2	PHASE 6	PHASE 8
Min Green 1 *	7	12	12	7
Extension 1	2.0	6.0	6.0	2.0
Max Green 1 *	15	90	90	25
Yellow Clearance	3.0	4.6	4.6	3.6
Red Clearance	2.4	1.1	1.1	1.5
Red Revert	2.0	2.0	2.0	2.0
Walk 1 *	-	-	-	-
Don't Walk 1	-	-	-	-
Seconds Per Actuation *	-	2.5	2.5	-
Max Variable Initial *	-	34	34	-
Time Before Reduction *	-	15	15	-
Time To Reduce *	-	30	30	-
Minimum Gap	-	3.0	3.0	-
Recall Mode	-	MIN RECALL	MIN RECALL	-
Vehicle Call Memory	-	YELLOW	YELLOW	-
Dual Entry	-	-	-	-
Simultaneous Gap	ON	ON	ON	ON

* These values may be field adjusted. Do not adjust Min Green and Extension times for phases 2 and 6 lower than what is shown. Min Green for all other phases should not be lower than 4 seconds.

New Installation

Stantec
Stantec Consulting Services Inc.
801 Jones Franklin Road-Suite 300
Raleigh, NC 27606
Tel. (919) 851-6866
Fax. (919) 851-7024
www.stantec.com
License No. F-0672

Prepared In the Offices of:
Transportation Mobility and Safety Division
STATE OF NORTH CAROLINA DEPARTMENT OF TRANSPORTATION
Signal Design Section
750 N.Greenfield Pkwy,Garner,NC 27529

SCALE 0 40 1"=40'

SR 1003 (Buffalo Road)
at
Kellie Drive

Division 04 Johnston County Smithfield

PLAN DATE:	December 2017	REVIEWED BY:	R. M. MUNCEY
PREPARED BY:	M. KIAEE	REVIEWED BY:	D. HARRIS

REVISIONS	INIT.	DATE

DOCUMENT NOT CONSIDERED FINAL UNLESS ALL SIGNATURES COMPLETED

SEAL
NORTH CAROLINA PROFESSIONAL SEAL 043239 ENGINEER REGINA M. MUNCEY

DocuSigned by: Regina M. Muncey 1/10/2018
CF6B1B02A7B4BE... DATE

SIG. INVENTORY NO. 04-1430

DATE
11/4/2017 10:18:54 AM
User: rmuncey

DocuSign Envelope ID: DC197EF1-CB13-449E-B732-E7D066DC8058

PROJECT REFERENCE NO.	SHEET NO.
U-5999	SIG 2.1

EDI MODEL 2018ECL-NC CONFLICT MONITOR PROGRAMMING DETAIL

(remove jumpers and set switches as shown)

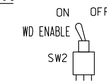

REMOVE DIODE JUMPERS 1-6, 1-9, 2-6, 2-9, and 6-9.

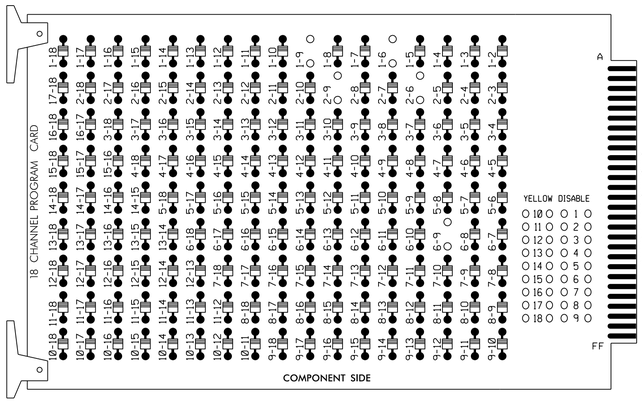

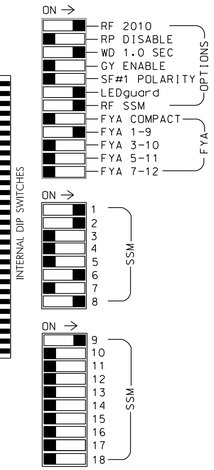

REMOVE JUMPERS AS SHOWN

■ = DENOTES POSITION OF SWITCH

NOTES:

1. Card is provided with all diode jumpers in place. Removal of any jumper allows its channels to run concurrently.
2. Ensure jumpers SEL2-SEL5 and SEL9 are present on the monitor board.
3. Ensure that Red Enable is active at all times during normal operation.
4. Connect serial cable from conflict monitor to comm. port 1 of 2070 controller. Ensure conflict monitor communicates with 2070.

NOTES

1. To prevent "flash-conflict" problems, insert red flash program blocks for all unused vehicle load switches in the output file. The installer shall verify that signal heads flash in accordance with the Signal Plans.
2. Enable Simultaneous Gap-Out for all phases.
3. Program phases 2 and 6 for Variable Initial and Gap Reduction.
4. Program phases 2 and 6 for Start Up In Green.
5. Program phases 2 and 6 for Yellow Flash, and overlap 1 as Wag Overlap.
6. The cabinet and controller are part of the SR 1923 (Booker Dairy Rd.) CLS.

EQUIPMENT INFORMATION

CONTROLLER.....2070
CABINET.....332 W/AUX
SOFTWARE.....ECONOLITE OASIS
CABINET MOUNT.....BASE
OUTPUT FILE POSITIONS...18 WITH AUX. OUTPUT FILE
LOAD SWITCHES USED.....S1,S2,S8,S11,AUXS1
PHASES USED.....1,2,6,8
OVERLAP "A".....1+2
OVERLAP "B".....NOT USED
OVERLAP "C".....NOT USED
OVERLAP "D".....NOT USED

SIGNAL HEAD HOOK-UP CHART

LOAD SWITCH NO.	S1		S2	S3	S4	S5	S6	S7	S8	S9	S10	S11	S12	AUX S1	AUX S2	AUX S3	AUX S4	AUX S5	AUX S6
CMU CHANNEL NO.	1		2	13	3	4	14	5	6	15	7	8	16	9	10	17	11	12	18
PHASE	1		2	2 PED	3	4	4 PED	5	6	6 PED	7	8	8 PED	OLA	OLB	SPARE	OLC	OLD	SPARE
SIGNAL HEAD NO.	★ 11	82	21.22	NU	NU	NU	NU	NU	61.62	NU	NU	81.82	NU	★ 11	NU	NU	NU	NU	NU
RED		✳	128						134			107							
YELLOW			129						135			108							
GREEN			130						136			109							
RED ARROW														A121					
YELLOW ARROW		126												A122					
FLASHING YELLOW ARROW														A123					
GREEN ARROW	127	127																	
✋																			
🚶																			

NU = Not Used

✳ Denotes install load resistor. See load resistor installation detail this sheet.

★ See pictorial of head wiring in detail this sheet.

INPUT FILE POSITION LAYOUT

(front view)

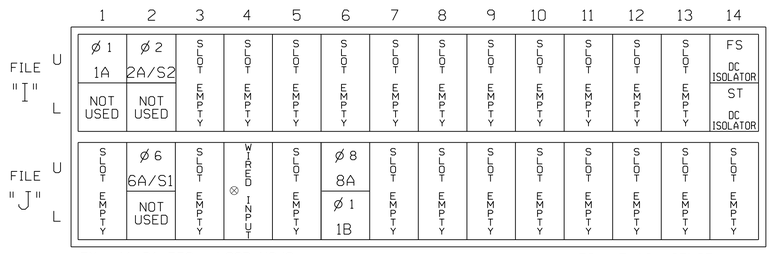

EX.: 1A, 2A, ETC. = LOOP NO.'S

FS = FLASH SENSE
ST = STOP TIME

⊗ Wired Input - Do not populate slot with detector card

INPUT FILE CONNECTION & PROGRAMMING CHART

LOOP NO.	LOOP TERMINAL	INPUT FILE POS.	PIN NO.	INPUT ASSIGNMENT NO.	DETECTOR NO.	NEMA PHASE	CALL	EXTEND	FULL TIME DELAY	STRETCH TIME	DELAY TIME
1A[1]	TB2-1,2	I1U	56	18	1	1	Y	Y			15
	---	J4U	48	10	26	6	Y	Y	Y		3
1B	TB5-11,12	J6L	46	8	18	1	Y	Y			15
2A/S2	TB2-5,6	I2U	39	1	2	2/SYS	Y	Y			
6A/S1	TB3-5,6	J2U	40	2	6	6/SYS	Y	Y			
8A	TB5-9,10	J6U	42	4	8	8	Y	Y			3

[1] Add jumper from I1-W to J4-W on rear of input file

INPUT FILE POSITION LEGEND: J2L
FILE J
SLOT 2
LOWER

LOAD RESISTOR INSTALLATION DETAIL

(install resistors as shown below)

ACCEPTABLE VALUES	
VALUE (ohms)	WATTAGE
1.5K - 1.9K	25W (min)
2.0K - 3.0K	10W (min)

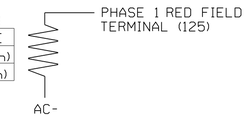

4 SECTION FYA PPLT SIGNAL WIRING DETAIL

(wire signal heads as shown)

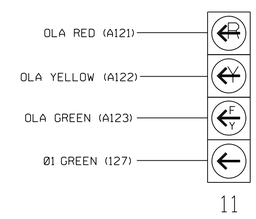

NOTE

1. The sequence display for this signal requires special logic programming. See sheet 2 of 2 for programming instructions.

THIS ELECTRICAL DETAIL IS FOR
THE SIGNAL DESIGN: 04-1430
DESIGNED: DEC 2017
SEALED: 1-10-2018
REVISED:

New Installation
Electrical Details-Sheet 1 of 2

DOCUMENT NOT CONSIDERED FINAL UNLESS ALL SIGNATURES COMPLETED

Stantec
Stantec Consulting Services Inc.
801 Jones Franklin Road-Suite 300
Raleigh, NC 27606
Tel. (919) 851-6866
Fax. (919) 851-7024
www.stantec.com
License No. F-0672

Prepared in the Offices of:
Transportation Mobility and Safety Division
STATE OF NORTH CAROLINA DEPARTMENT OF TRANSPORTATION
Signals Management Section
750 N.Greenfield Pkwy,Garner,NC 27529

SR 1003 (Buffalo Road)
at
Kellie Drive

Division 04 Johnston County Smithfield

PLAN DATE: December 2017	REVIEWED BY: R. M. MUNCEY
PREPARED BY: M. KIAEE	REVIEWED BY: D. HARRIS

REVISIONS	INIT.	DATE

NORTH CAROLINA PROFESSIONAL SEAL 043239 ENGINEER REGINA M. MUNCEY

DocuSigned by: Regina M. Muncey
C7FE51B52245FA...
SIGNATURE 1/10/2018 DATE

SIG. INVENTORY NO. 04-1430

DATE:
USER: 1/10/2018
User:rmuncey

DocuSign Envelope ID: E695D6D4-10F1-4FC9-8D25-13EFFA104460

NCDOT METAL POLE STANDARDS

PROJECT I.D. NO.	SHEET NO.
U-5999	Sig.M1

STATE OF NORTH CAROLINA
DIVISION OF HIGHWAYS

STANDARD DRAWINGS FOR ALL METAL POLES

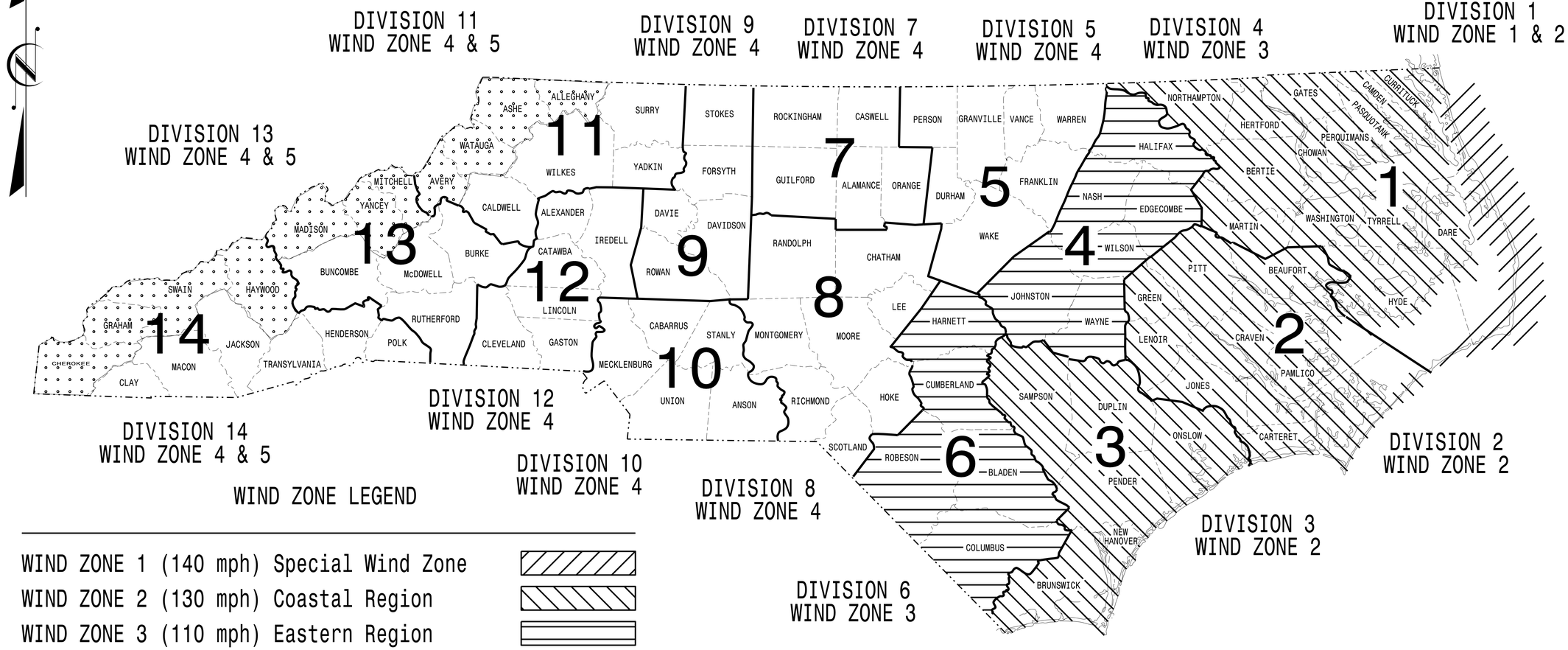

WIND ZONE LEGEND

WIND ZONE 1 (140 mph) Special Wind Zone	
WIND ZONE 2 (130 mph) Coastal Region	
WIND ZONE 3 (110 mph) Eastern Region	
WIND ZONE 4 (90 mph) Central & Mtn. Region	
WIND ZONE 5 (120 mph) Special Wind Zone	

https://connect.ncdot.gov/resources/safety/Pages/ITS-Design-Resources.aspx

Prepared in the Offices of:
Transportation Mobility and Safety Division
Signal Design Section
750 N.Greenfield Pkwy.
Garner,NC 27529

Designed in conformance with the latest 2015 Interim to the 6th Edition 2013

AASHTO

Standard Specifications for Structural Supports for Highway Signs, Luminaires, and Traffic Signals

INDEX OF PLANS

DRAWING NUMBER	DESCRIPTION
Sig. M 1	Statewide Wind Zone Map
Sig. M 2	Typical Fabrication Details–All Metal Poles
Sig. M 3	Typical Fabrication Details–Strain Poles
Sig. M 4	Typical Fabrication Details–Mast Arm Poles
Sig. M 5	Typical Fabrication Details–Mast Arm Connection
Sig. M 6	Typical Fabrication Details–Strain Pole Attachments
Sig. M 7	Construction Details–Foundations
Sig. M 8	Standard Strain Pole Foundation–All Soil Conditions

NCDOT CONTACTS:

MOBILITY AND SAFETY DIVISION – ITS AND SIGNALS UNIT

M.M. MCDIARMID, P.E. – STATE ITS AND SIGNALS ENGINEER

J. P. GALLOWAY, P.E. – STATE SIGNALS ENGINEER

D.C. SARKAR, P.E. – ITS AND SIGNALS SENIOR STRUCTURAL ENGINEER

SEAL

NORTH CAROLINA PROFESSIONAL SEAL 028094 ENGINEER DEBESH C. SARKAR

DocuSigned by: Debesh C. Sarkar
44EBE3C3C7C4...
SIGNATURE

10/11/2017
DATE

DocuSign Envelope ID: E695D6D4-10F1-4FC9-8D25-13EFFA104460

PROJECT ID. NO.	SHEET NO.
U-5999	Sig.M2

Fabrication Details – All Metal Poles

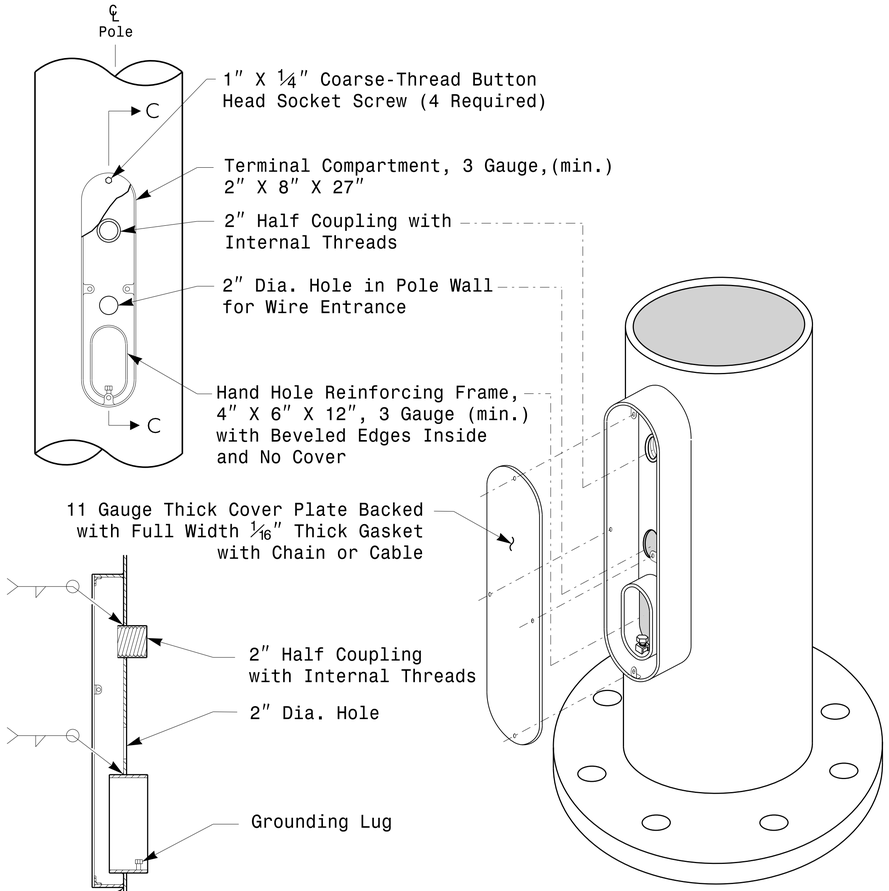

Section C-C

Note: Unless otherwise specified, locate Terminal Compartment 1 foot above the pole base plate at 180 degrees on the pole's radial index.

Terminal Compartment Detail

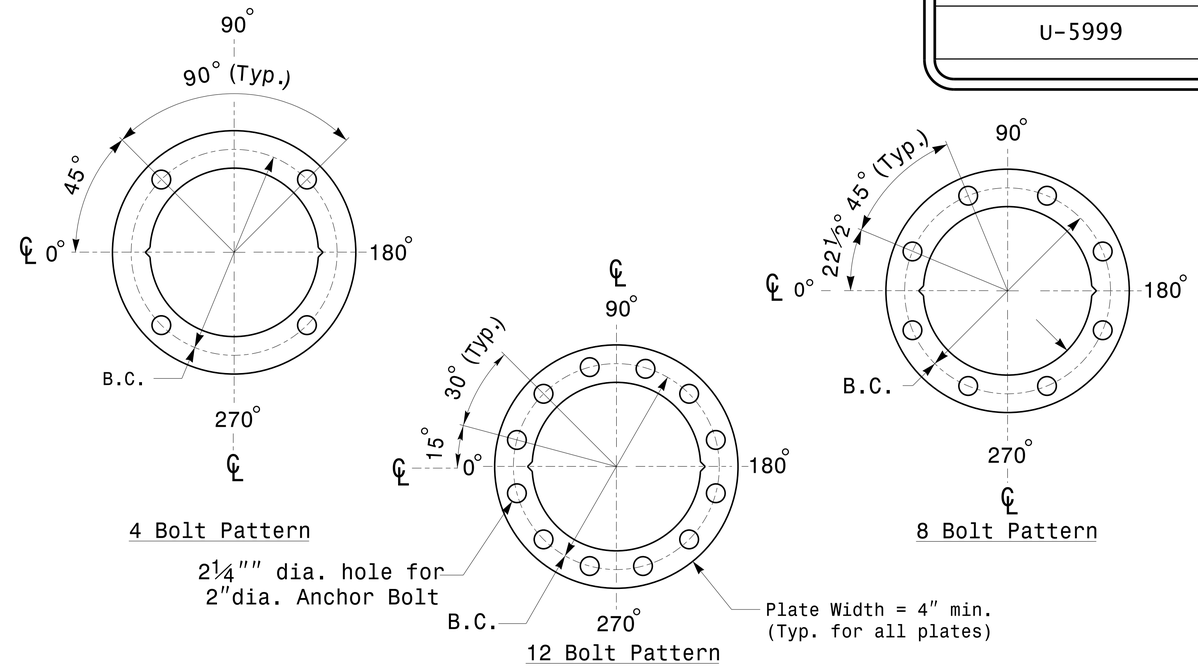

Construct Templates and Plates from ¼″ min. thick Steel. Galvanizing is not required.

Base Plate Template and Anchor Bolt Lock Plate Details

MFG _____ MFG. DATE: MM/YY
SHAFT D/T/L/Y ----/----/----/----
ARM-A D/T/L/Y ----/----/----/----
----/----/----/----
ARM-B D/T/L/Y ----/----/----/----
----/----/----/----
A.B. DIA./B.C./L/Y ----/----/----/----
NCDOT SIG. INV. NO. _____
NCDOT POLE NO. _____

Shaft I.D. Tag
(Provide on Shaft of Strain Poles and Mast Arm Poles Shaft)

MFG _____ MFG. DATE: MM/YY
SECTION D/T/L/Y ----/----/----/----
NCDOT SIG. INV. NO. _____
NCDOT POLE NO. _____

Arm I.D. Tag
(Provide on each section of a multi-section mast arm.)

Notes:
1) D= Diameter, T= Thickness, L= Length, Y= Yield Strength
2) A.B. = Anchor Bolt
3) B.C. = Bolt Circle of Anchor Bolts
4) If Custom Design, use "NCDOT STANDARD" line for Signal Inv. Number and pole I.D. number
5) See drawing M3 and M4 for mounting positions of I.D. tags.

Identification Tag Details

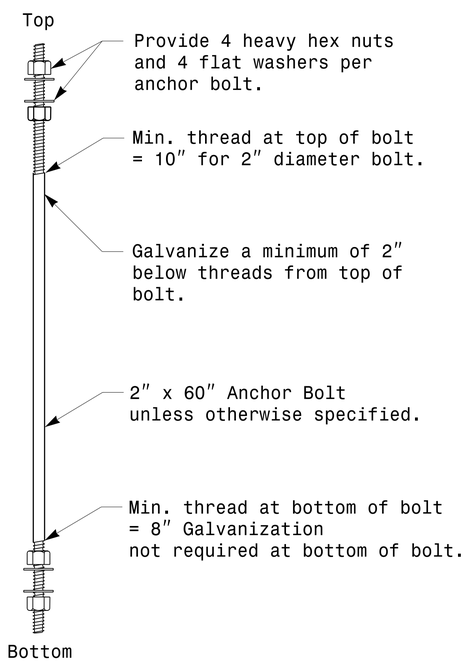

Anchor Bolt Detail

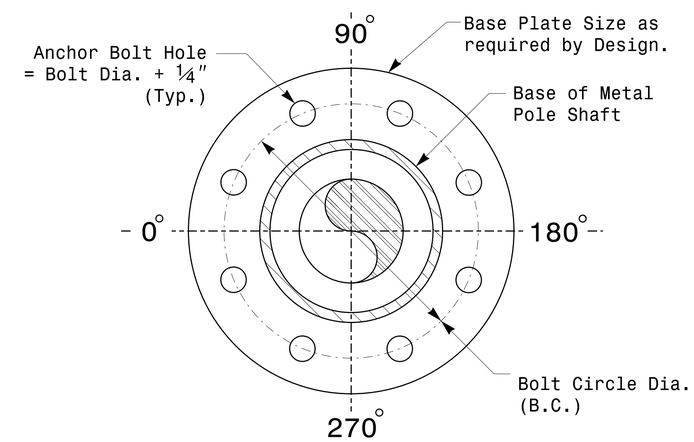

Note: Base plate may be circular,octagonal,square or rectangular in shape.

Typical Base Plate Detail

Prepared in the Offices of:
Transportation Mobility and Safety Division
Signal Design Section
750 N.Greenfield Pkwy,Garner,NC 27529

SCALE 0 NA NONE

Typical Fabrication Details For All Metal Poles

PLAN DATE:	OCTOBER 2017	DESIGNED BY:	C.F.ANDREWS
PREPARED BY:	N. BITTING	REVIEWED BY:	D.C. SARKAR

REVISIONS	INIT.	DATE

SEAL
NORTH CAROLINA PROFESSIONAL SEAL 028094 ENGINEER DEBESH C. SARKAR

DocuSigned by: Debesh C. Sarkar 44EBE32B0B4C... SIGNATURE 10/11/2017 DATE

11-OCT-2017 08:30
S:*ITS&SU*ITS Signals*Signal Design Section*Eastern Region*M Sheets*2016*2014 Sig.M2 Std. Fabrication Details-All Poles..dgn
rzalfman

DocuSign Envelope ID: E695D6D4-10F1-4FC9-8D25-13EFFA104460

PROJECT ID. NO.	SHEET NO.
U-5999	Sig.M3

Fabrication Details – Strain Poles

Note:
1. Opening in pole base plate shall be equal to pole base inside diameter minus 3½" but shall not be less than 8½".

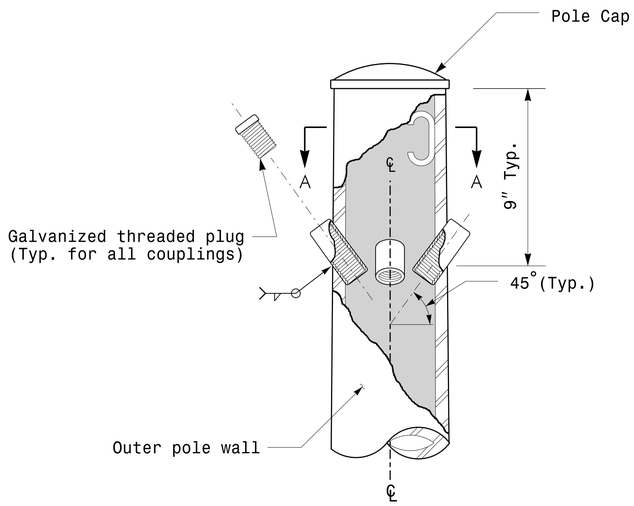

Cable Entrances at Top of Pole

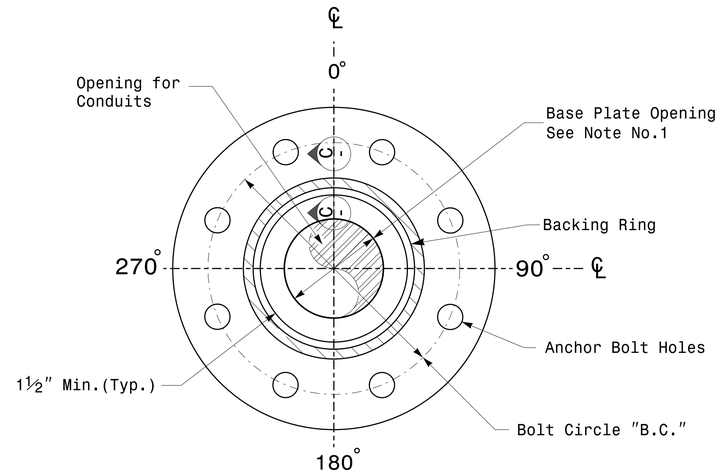

Section B-B

Pole Base Plate Details
(8 and 12 Bolt Pattern)

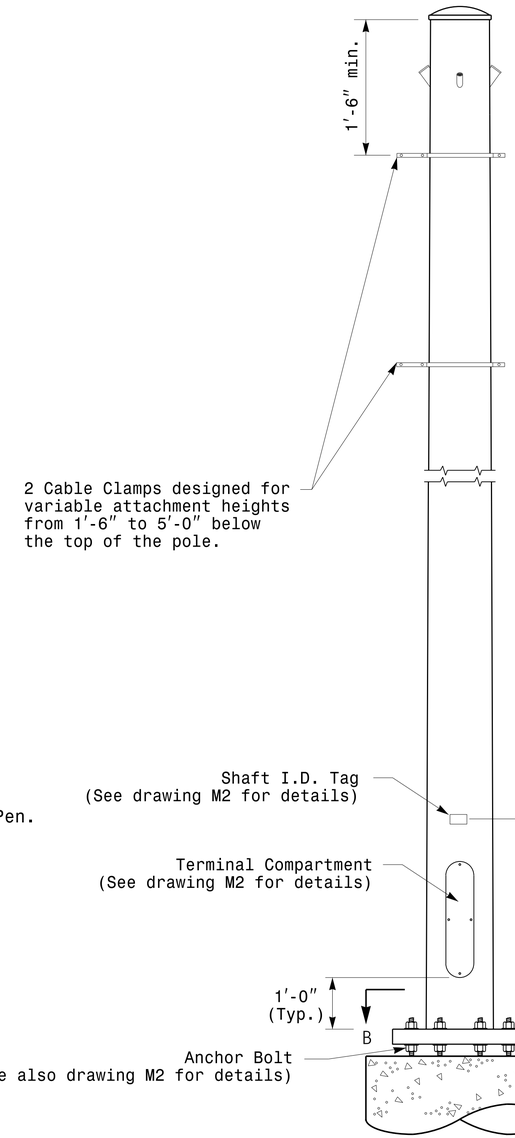

Monotube Strain Pole

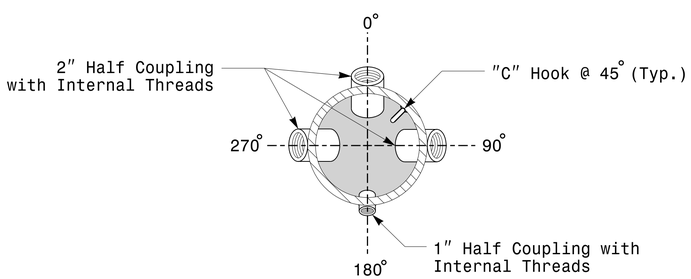

Section A-A

Radial Orientation for Factory Installed
Accessories at Top of Pole

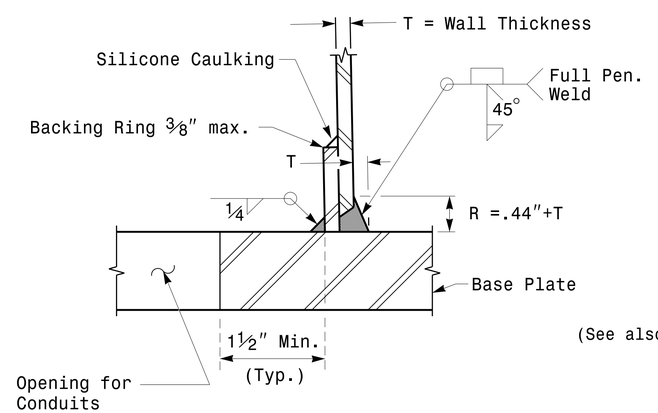

Section C-C
(Pole Attachment to Base Plate)

Full-Penetration
Groove Weld Detail

Prepared in the Offices of:
Transportation Mobility and Safety Division
Traffic Engineering Branch
Signal Design Section
750 N.Greenfield Pkwy,Garner,NC 27529

SCALE
0 NA
NONE

Typical Fabrication Details
For
Strain Poles

PLAN DATE:	OCTOBER 2017	DESIGNED BY:	K.C.DURIGON
PREPARED BY:	N. BITTING	REVIEWED BY:	D.C. SARKAR

REVISIONS	INIT.	DATE

SEAL
NORTH CAROLINA PROFESSIONAL SEAL 028094 ENGINEER DEBESH C. SARKAR

DocuSigned by:
Debesh C. Sarkar
44BE8E3D0A7C4B0...
SIGNATURE

10/11/2017
DATE

11-OCT-2017 08:25
S:\TSS&SW\ITS Signals\Signal Design Section\Eastern Region\M Sheets\2016\2014 Sig.M3 Std. Fabrication Details-Strain Poles.dgn
rnatisgr

DocuSign Envelope ID: E695D6D4-10F1-4FC9-8D25-13EFFA104460

PROJECT ID. NO.	SHEET NO.
U-5999	Sig.M4

Fabrication Details – Mast Arm Poles

Note:
1. Opening in pole base plate shall be equal to pole base inside diameter minus 3½″ but shall not be less than 8½″.

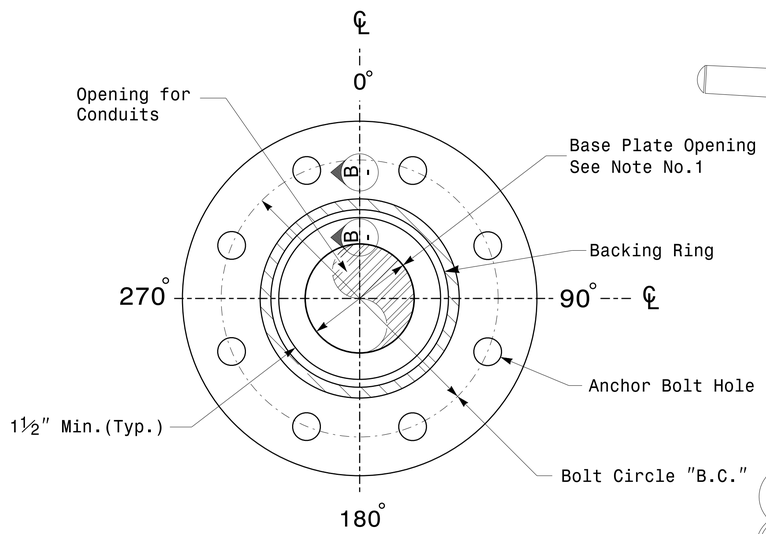

Section A-A

Pole Base Plate Details

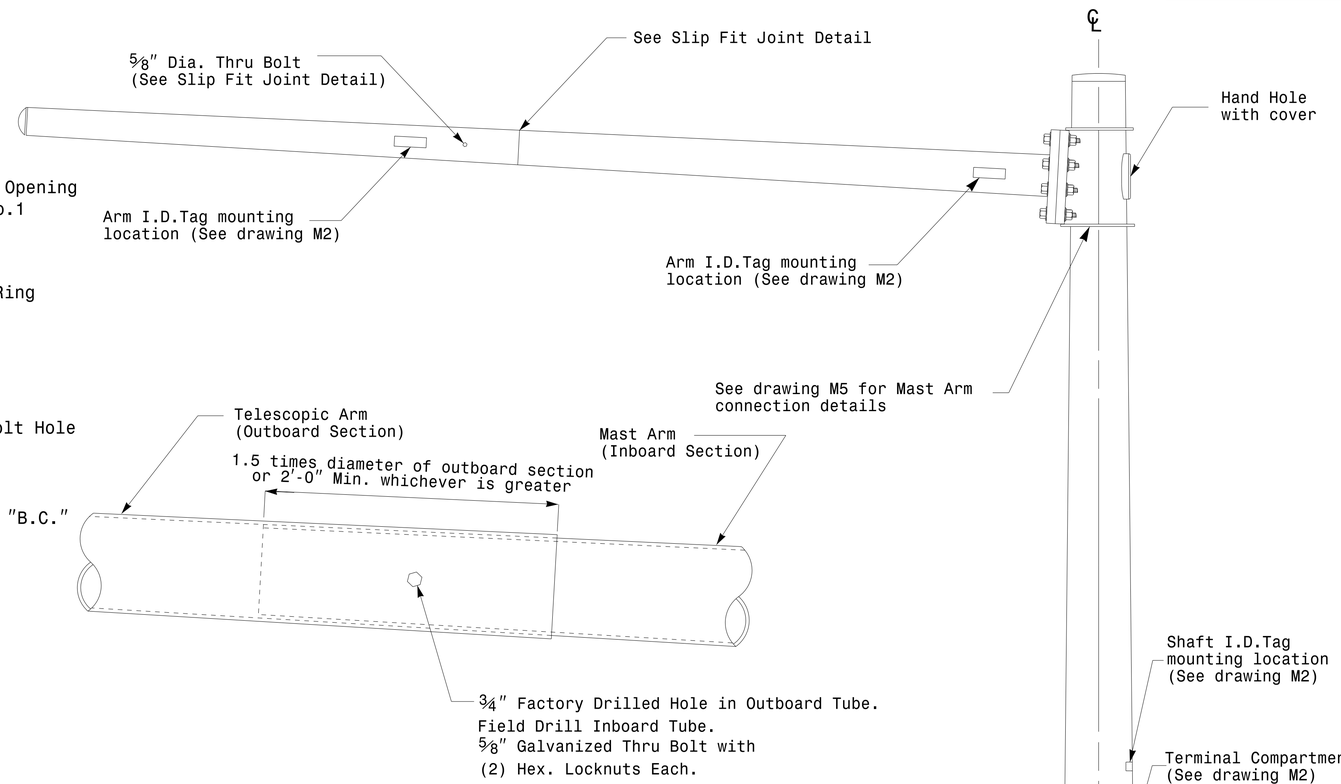

Slip Fit Joint Detail for Mast Arm

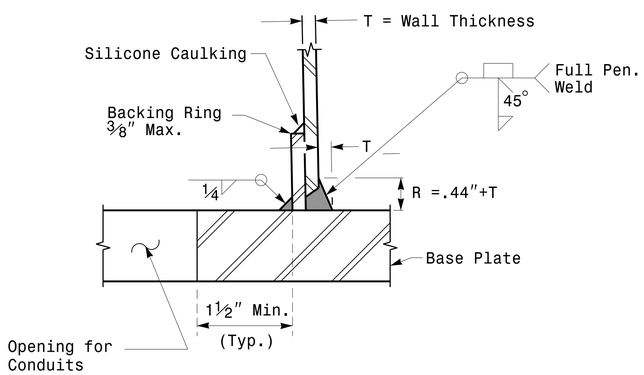

Section B-B

(Pole Attachment to Base Plate)

Full-Penetration Groove Weld Detail

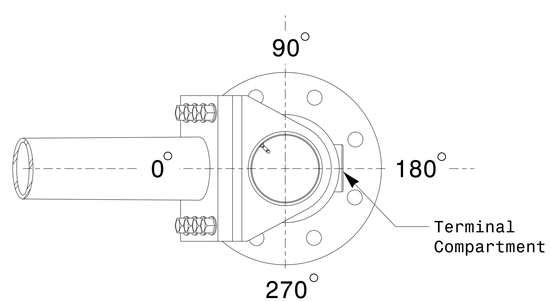

Mast Arm Radial Orientation

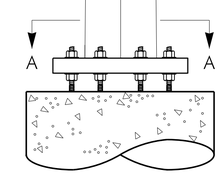

Mast Arm Pole

Prepared in the Offices of:
Transportation Mobility and Safety Division
Signal Design Section
750 N.Greenfield Pkwy,Garner,NC 27529

SCALE
0 NA
NONE

Typical Fabrication Details
For
Mast Arm Poles

PLAN DATE:	OCTOBER 2017	DESIGNED BY:	K.C.DURIGON
PREPARED BY:	N. BITTING	REVIEWED BY:	D.C. SARKAR

REVISIONS	INIT.	DATE

SEAL
NORTH CAROLINA PROFESSIONAL SEAL 028094 ENGINEER DEBESH C. SARKAR

DocuSigned by: Debesh C. Sarkar
SIGNATURE
10/11/2017
DATE

11-OCT-2017 08:33
S:\TSAS\ITS Signals\Signal Design Section\Eastern Region\M Sheets\2016\2014 Sig.M4 Std. Fabrication Details-Mast Arm Poles.dgn
rsitnsor

DocuSign Envelope ID: E695D6D4-10F1-4FC9-8D25-13EFFA104460

Welded Ring Stiffened Mast Arm Connection

PROJECT ID. NO.	SHEET NO.
U-5999	Sig.M5

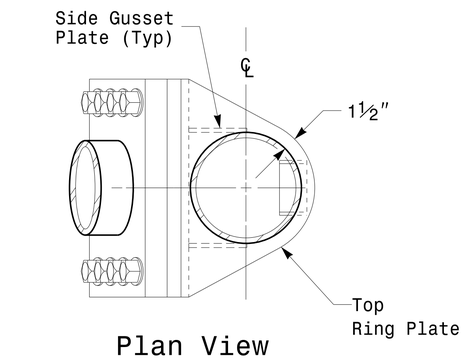

Plan View

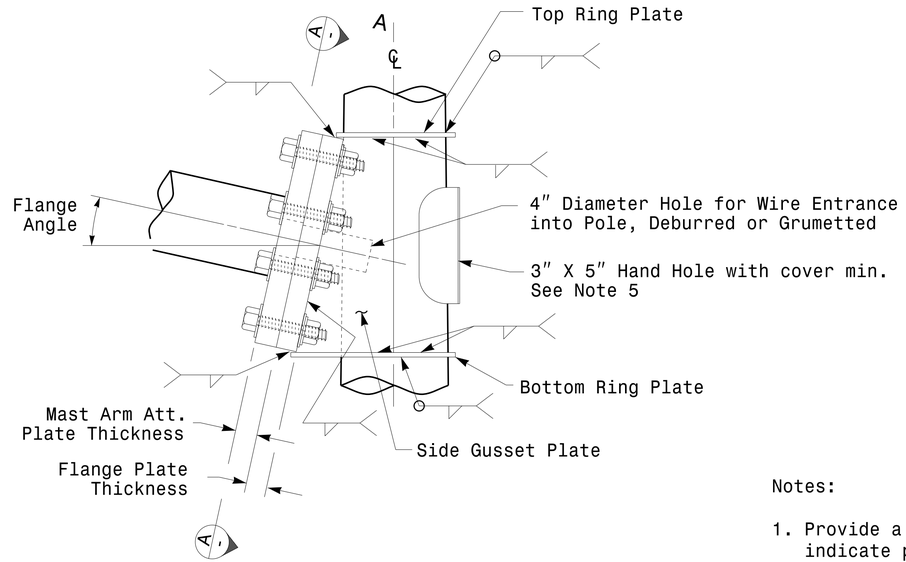

Side Elevation View

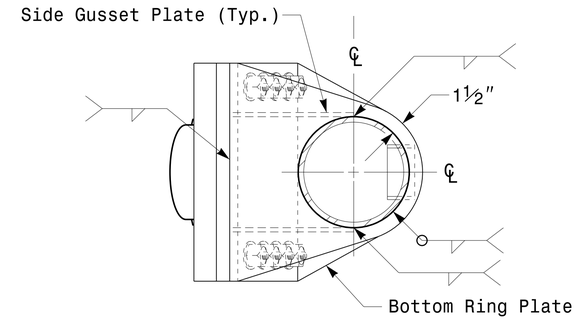

Bottom View

Notes:

1. Provide a permanent means of identification above the mast arm to indicate proper attachment orientation of the mast arm.
2. Designer will determine the size of all structural components, plates, fasteners, and welds shown unless they are already specified.
3. Fabricator is responsible for providing appropriate holes at drainage points to drain galvanizing materials.
4. For minimum edge distance follow AISC Table J3.4 and J3.5. For nominal bolt hole size use Table J3.3.
5. Provide upper handhole as necessary when shaft extensions are reguired for luminaire arms or camera. For poles without luminaires/camera, wiring can be done through the top of pole.
6. Allowable range of flange tilt angle will vary from 0° to as required.

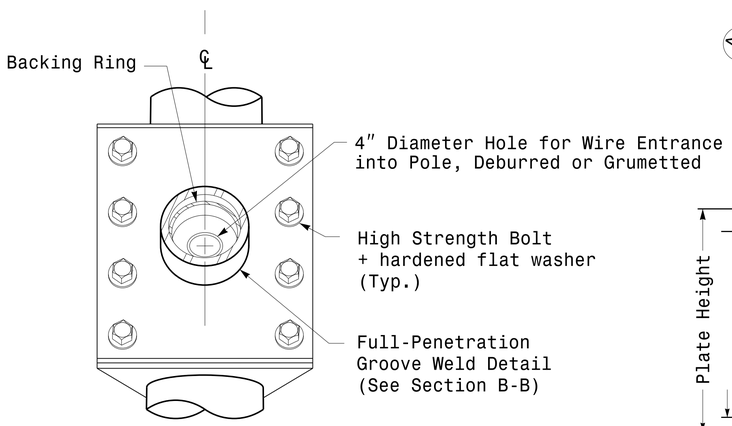

Front Elevation View

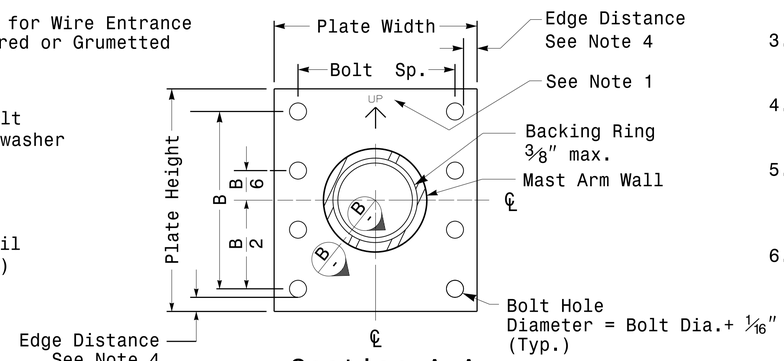

Section A-A
Mast Arm Attachment Plate

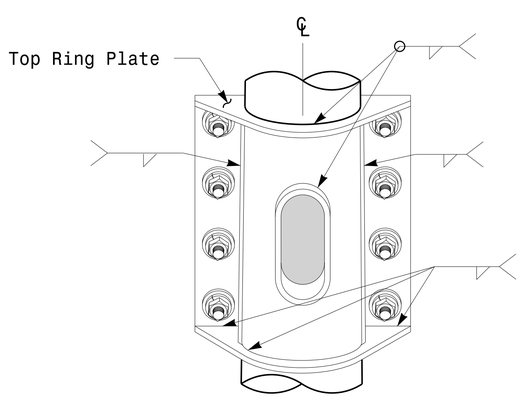

Back Elevation View

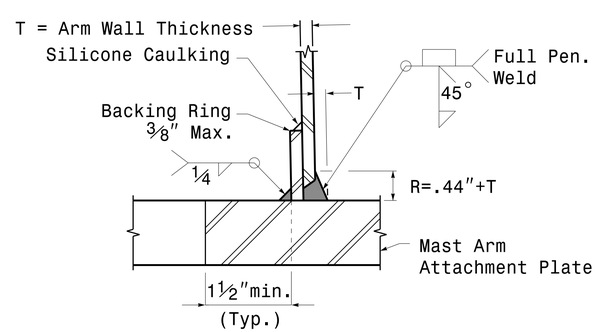

Section B-B
Full-Penetration Groove Weld Detail

Prepared in the Offices of:
Transportation Mobility and Safety Division
Signal Design Section
750 N.Greenfield Pkwy,Garner,NC 27529

SCALE
0 NA
NONE

Typical Fabrication Details
For
Mast Arm Connection To Pole

PLAN DATE:	OCTOBER 2017	DESIGNED BY:	C.F.ANDREWS
PREPARED BY:	N. BITTING	REVIEWED BY:	D.C. SARKAR

REVISIONS	INIT.	DATE

SEAL
NORTH CAROLINA PROFESSIONAL SEAL 028094 ENGINEER DEBESH C. SARKAR

DocuSigned by: Debesh C. Sarkar
4AEBE3E3C0A4F... SIGNATURE
10/11/2017
DATE

Fabrication Details – Mast Arm Connection

11-OCT-2017 08:35
S:\TSAS\TS Signals\Signal Design Section\Eastern Region\M Sheets\2016\2014 Sig.M5 Std. Connection Fabrication Details-Mast Arm Poles.dgn
rsitnsor

DocuSign Envelope ID: E695D6D4-10F1-4FC9-8D25-13EFFA104460

PROJECT ID. NO.	SHEET NO.
U-5999	Sig.M6

Fabrication Details – Strain Pole Attachments

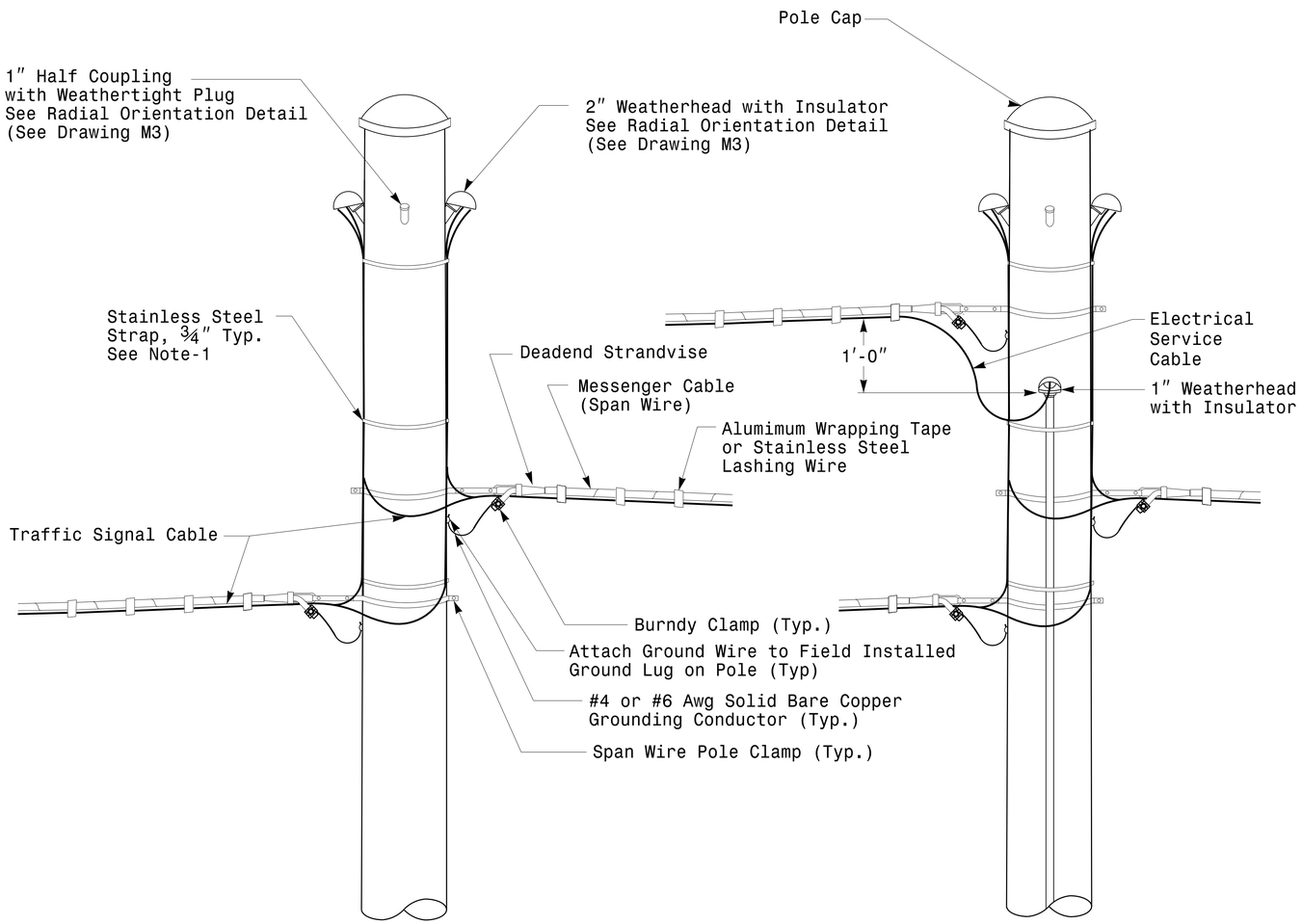

Strain Pole Attachments

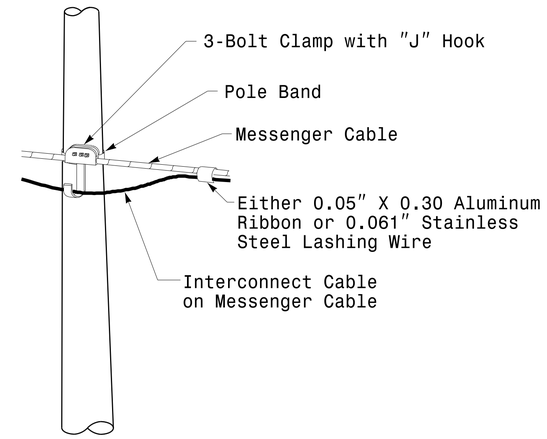

Attachment of Cable to Intermediate Metal Pole

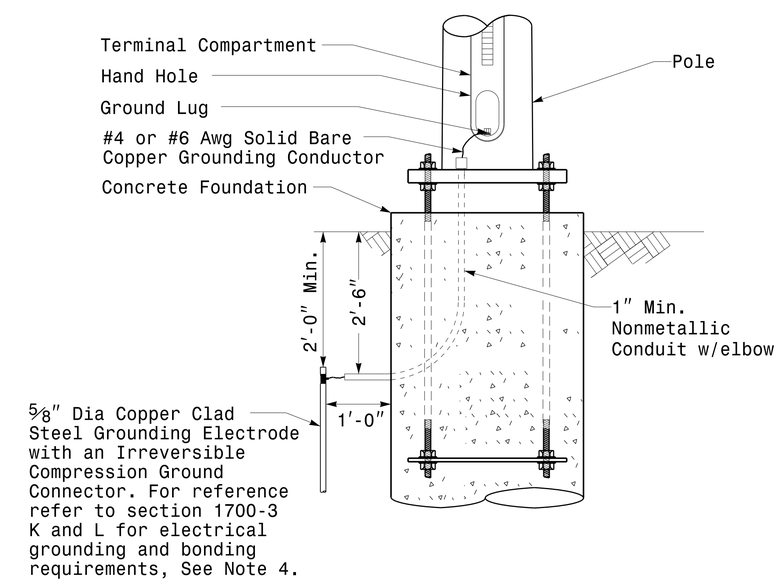

Metal Pole Grounding Detail For Strain Pole and Mast Arm

NOTE:

1. Strap all signal cables to the side of the pole with ¾″ stainless steel straps when the distance between the spanwire attachment clamp and the weatherheads exceeds 3′-0″.
2. Provide minimum two spanwire pole clamps per pole.
3. It is prohibited to attach two span wires at one pole clamp.
4. For general requirements refer to NCDOT Standard Specifications for Roadway and Structures, January 2018.

Prepared in the Offices of:
Transportation Mobility and Safety Division
Signal Design Section
750 N.Greenfield Pkwy.Garner.NC 27529

SCALE
0 NA
NONE

Typical Fabrication Details
For
Strain Pole Attachments

PLAN DATE:	OCTOBER 2017	DESIGNED BY:	C.F.ANDREWS
PREPARED BY:	N. BITTING	REVIEWED BY:	D.C. SARKAR

REVISIONS	INIT.	DATE

SEAL
NORTH CAROLINA PROFESSIONAL SEAL 028094 ENGINEER DEBESH C. SARKAR

DocuSigned by: Debesh C. Sarkar
SIGNATURE
10/11/2017
DATE

11-OCT-2017 08:36
S:\TTSASU\TS Signals\Signal Design Section\Eastern Region\MS Sheets\2016\2014 Sig.M6 Std. Fabrication Details-Strain Poles.dgn
rmitscher

DocuSign Envelope ID: E695D6D4-10F1-4FC9-8D25-13EFFA104460

PROJECT ID. NO.	SHEET NO.
U-5999	Sig.M7

Construction Details – Foundations

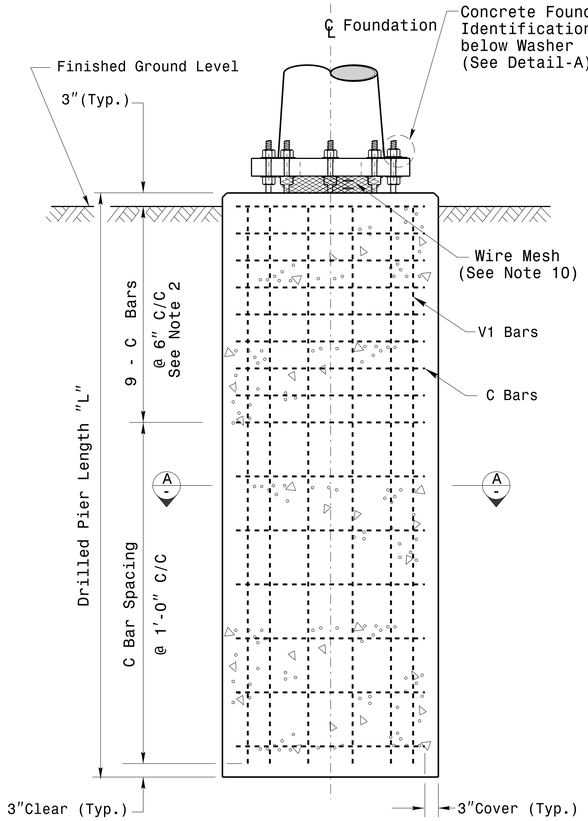

Concrete Shaft Elevation

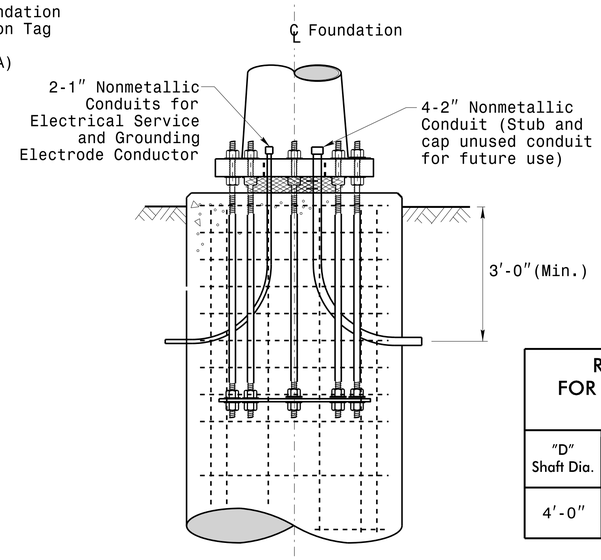

Typical Foundation Conduit Details

REINFORCING STEEL TABLE FOR STANDARD DRILL PIER SHAFT (4'–0" DIAMETER)						
"D" Shaft Dia.	Conc. Volume (cu. yds.)	Bar Name	MIN.	Size	Type	Length
4'-0"	.465 x L	V1	—	#8	STR.	**
		C	*	#4	CIR.	12'-6"

* See Note No. 2
** See Note No. 3

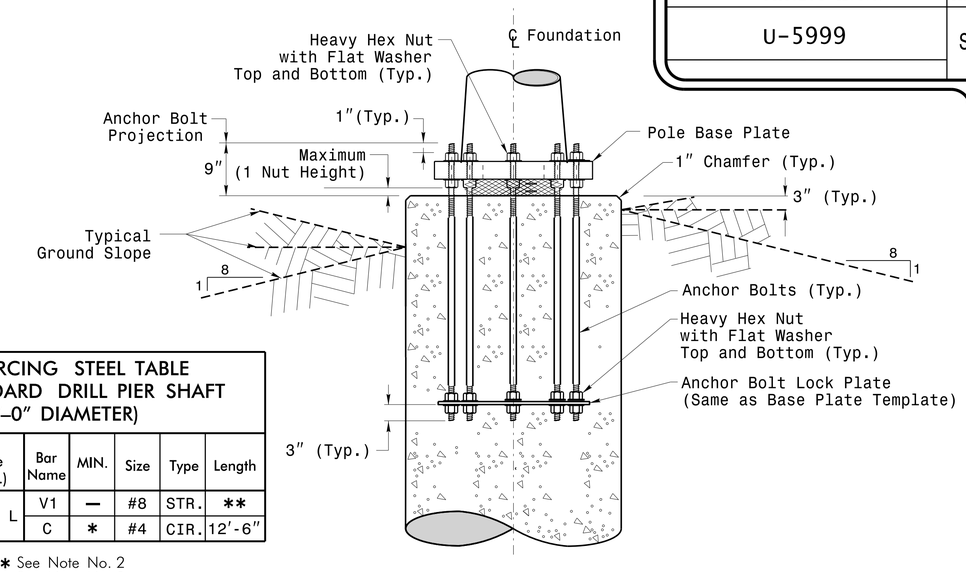

Typical Foundation Anchor Bolt Details

(Reinforcing Cage Not Shown for Clarity)

General Notes:

1. If actual subsurface conditions differ significantly from boring data contact the Engineer before excavating or placing concrete.
2. Circular tie reinforcing rings may be vertically adjusted by +/-3" at a depth between 2'-0" and 3'-0" to facilitate the installation of electrical conduit entering in the cage.
3. For standard foundations, see sheet Sig. M8 for details. Vertical reinforcing bars (V1) may be horizontally adjusted by +/-3" to facilitate the installation of electrical conduit entering into the cage.
4. Provide 2" to 5" foundation projection above ground level depending on the ground slope.
5. Unless otherwise shown, foundation designs are based on non-sloping level ground surfaces with slope ratios of 8:1 (H:V) or flatter. If actual ground line slopes are steeper contact the Engineer before excavating or placing concrete.
6. Construct foundations in accordance with NCDOT Standard Provisions SP09 R005- Foundations and Anchor Rod Assemblies for Metal Poles. All applicable 2018 NCDOT Standard Specifications are referenced in this provision. Refer to the NCDOT Resources/Specifications page located on the Connect NCDOT website.

   https://connect.ncdot.gov/resources/Specifications and Special Provisions.aspx
7. Use air entrained AA concrete mix with a compression strength of f'c=4500 psi.(min.) after 28 days.
8. Use ASTM A615 grade 60 deformed bars for all reinforcing steel. Maintain at least 3" cover on all reinforcement.
9. Locate the Identification Tag on the top of the base plate, directly above the conduit's entry point.
10. Provide two layers of galvanized welded 23 gauge (0.25) 6" wide 4 mesh wire around pipes under the base plate and secure it with ties if necessary.
11. Preferred location for the I.D. Tag is as shown in Detail-A; directly above the conduit entering the foundation.

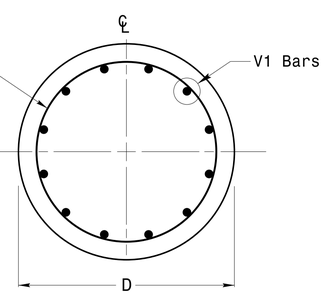

Section A-A

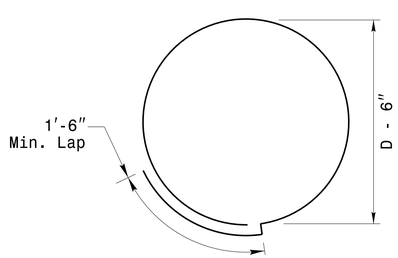

Typical "C" Bar Detail

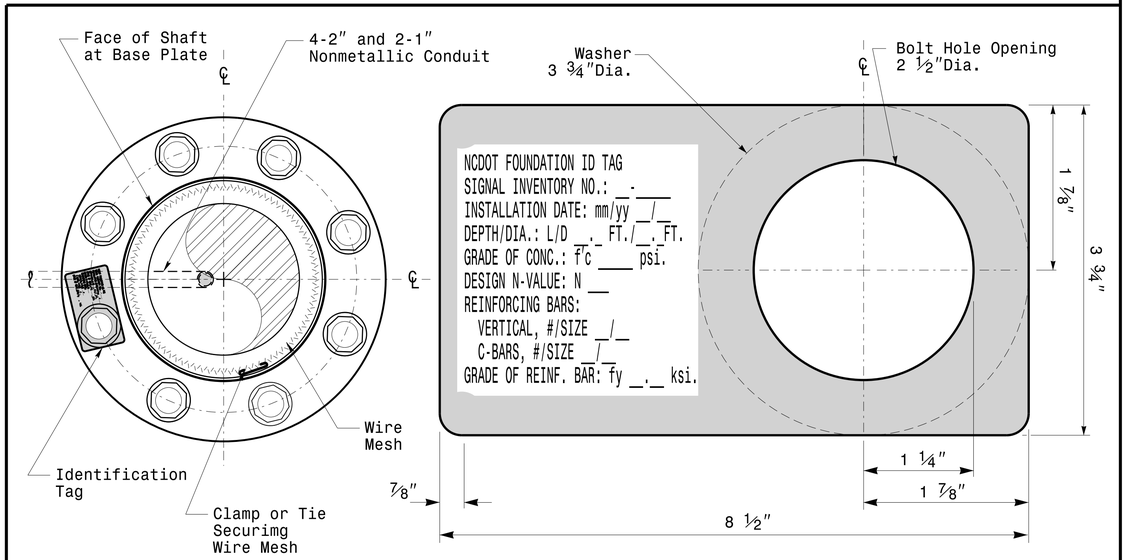

D = Diameter
L = Length/Depth
mm = Month
yy = Year

Detail-A

Concrete Foundation Identification Tag Details

Prepared in the Offices of:
Transportation Mobility and Safety Division
Signal Design Section
750 N.Greenfield Pkwy.Garner,NC 27529

SCALE: 0 NA — NONE

Construction Details For Foundations

PLAN DATE:	OCTOBER 2018	DESIGNED BY:	C.B.COGDELL
PREPARED BY:	N. BITTING	REVIEWED BY:	D.C. SARKAR

REV. NO.	COMMENTS	INIT.	DATE
1	Revised Foundation Tag Details	N.B.	5/11/2015

SEAL: NORTH CAROLINA PROFESSIONAL SEAL 028094 ENGINEER DEBESH C. SARKAR

DocuSigned by: Debesh C. Sarkar — 4AEBE3D5E0B4CE... SIGNATURE — 10/11/2017 DATE

11-OCT-2017 08:37
S:\TTSA&SU\TTS Signals\Signal Design Section\Eastern Region\M Sheets\2016\2014 Sig.M7 Std. Construction Details-Strain Poles.dgn
rsallsbur

DocuSign Envelope ID: E695D6D4-10F1-4FC9-8D25-13EFFA104460

PROJECT ID. NO.	SHEET NO.
U-5999	Sig.M8

SOIL CONDITION

		STANDARD STRAIN POLES						STANDARD FOUNDATIONS 48″ Diameter Drilled Pier Length (L) – Feet							Reinforcement			
					Reactions at the Pole Base			Clay				Sand			Longitudinal		Stirrups	
		Case No.	Pole Height (Ft.)	Base Plate BC (In.)	Axial (kip)	Shear (kip)	Moment (ft–kip)	Medium N–Value 4–8	Stiff N–Value 9–15	Very Stiff N–Value 16–30	Hard N–Value >30	Loose N–Value 4–10	Medium N–Value 11–30	Dense N–Value >30	Bar Size (#)	Quantity (ea.)	Bar Size (#)	Spacing (in.)
WIND ZONE 1	LIGHT	S26L3	26	25	2	11	270	19	13	10	8	17	14.5	12.5	8	12	4	12
		S30L3	30	25	2	11	300	19.5	13.5	10	8	17.5	15	13	8	14	4	12
		S35L3	35	25	3	11	320	20	13.5	10.5	8	17.5	15	13	8	14	4	12
	HEAVY	S30H3	30	29	3	16	450	24.5	16	12	9	21	17.5	15	8	16	4	6
		S35H3	35	29	4	16	515	26	17	12.5	9.5	22	18.5	16	8	16	4	6
WIND ZONE 2	LIGHT	S26L2	26	23	2	10	245	18	12.5	9.5	8	16.5	14	12	8	12	4	12
		S30L2	30	23	2	10	270	18.5	12.5	10	8	16.5	14	12.5	8	12	4	12
		S35L2	35	23	3	10	300	19.5	13	10	8	17	14.5	13	8	12	4	12
	HEAVY	S30H2	30	29	3	15	415	23	15.5	11.5	9	20	17	14.5	8	16	4	6
		S35H2	35	29	4	15	475	25	16.5	12	9.5	21	17.5	15.5	8	16	4	6
WIND ZONE 3	LIGHT	S26L2	26	23	2	10	245	18	12.5	9.5	8	16.5	14	12	8	12	4	12
		S30L2	30	23	2	10	270	18.5	12.5	10	8	16.5	14	12.5	8	12	4	12
		S35L2	35	23	3	10	300	19.5	13	10	8	17	14.5	13	8	12	4	12
	HEAVY	S30H2	30	29	3	15	415	23	15.5	11.5	9	20	17	14.5	8	16	4	6
		S35H2	35	29	4	15	475	25	16.5	12	9.5	21	17.5	15.5	8	16	4	6
WIND ZONE 4	LIGHT	S26L1	26	22	2	8	190	16	11.5	8.5	8	15	12.5	11	8	12	4	12
		S30L1	30	22	2	8	205	16.5	11.5	9	8	15	13	11.5	8	12	4	12
		S35L1	35	22	3	8	230	17	12	9	8	15.5	13.5	11.5	8	12	4	12
	HEAVY	S30H1	30	25	3	12	320	20.5	13.5	10.5	8	18	15	13.5	8	16	4	6
		S35H1	35	25	4	12	350	21	14	10.5	8.5	18.5	15.5	13.5	8	16	4	6
WIND ZONE 5	LIGHT	S26L2	26	23	2	10	245	18	12.5	9.5	8	16.5	14	12	8	12	4	12
		S30L2	30	23	2	10	270	18.5	12.5	10	8	16.5	14	12.5	8	12	4	12
		S35L2	35	23	3	10	300	19.5	13	10	8	17	14.5	13	8	12	4	12
	HEAVY	S30H2	30	29	3	15	415	23	15.5	11.5	9	20	17	14.5	8	16	4	6
		S35H2	35	29	4	15	475	25	16.5	12	9.5	21	17.5	15.5	8	16	4	6

48″ Dia. Foundations Concrete Volume (cubic yards) = (0.465) x Drilled Pier Length

General Notes:

1. Values shown in the "Reactions at the Pole Base" column represent the minimum acceptable capacity allowed for design using a design CSR of 1.00.
2. Use chairs and spacers to maintain proper clearance.
3. For foundation, always use air-entrain concrete mix.

Foundation Selection:

1. Perform a standard penetration test at each proposed foundation site to determine "N" value.
2. Select the appropriate wind zone from M 1 drawing.
3. Select the soil type (Clay or Sand) that best describes the soil characteristics.
4. Get the appropriate standard pole case number from the plans or from the Engineer.
5. Select the appropriate column under "Standard Foundations" based on soil type and "N" value. Select the appropriate row based on the pole load case.
6. The foundation depth is the value shown in the "Standard Foundations" category where the column and the row intersect.
7. Use Construction Procedures and Design Methods prescribed by FHWA-NHI-10-016 for Reference Drilled Shafts.

Standard Strain Pole Foundation–All Soil Condition

Prepared in the Offices of: Transportation Mobility and Safety Division, Signal Design Section
750 N.Greenfield Pkwy,Garner,NC 27529

SCALE: 0 NA — NONE

Standard Strain Pole Foundation for All Soil Conditions

PLAN DATE:	OCTOBER 2017	DESIGNED BY:	C.B. COGDELL
PREPARED BY:	N. BITTING	REVIEWED BY:	D.C. SARKAR

REVISIONS	INIT.	DATE
Changed "Foundation Depth" to "Drilled Pier Length" in Conc. Eqn.	N.B.	7/12/2015

SEAL

NORTH CAROLINA PROFESSIONAL SEAL 028094 ENGINEER DEBESH C. SARKAR

DocuSigned by: Debesh C. Sarkar — SIGNATURE — 10/11/2017 DATE

11-OCT-2017 08:40
S:\TS&SU\TS Signals\Signal Design Section\Eastern Region\M Sheets\2016\2014 Sig.M8 Std. Strain Pole Found.-Saturated Soil Condition.dgn
rrazinsky

DocuSign Envelope ID: BB2E245B-613E-4FFF-904E-00795DDFC54C

Project No.	Sheet No.
U-5999	SCP-01

STATE OF NORTH CAROLINA
DIVISION OF HIGHWAYS

JOHNSTON COUNTY

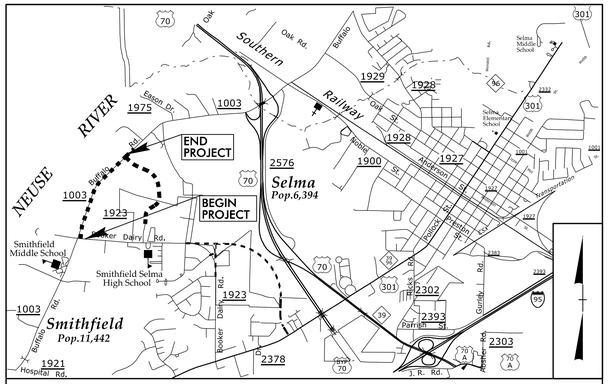

VICINITY MAP

LOCATION: SR 1003 (BUFFALO ROAD) FROM THE INTERSECTION OF SR 1923 (E BOOKER DAIRY ROAD) TO THE INTERSECTION OF KELLIE DRIVE (NEW SIGNAL)

TYPE OF WORK: SYSTEM COMMUNICATIONS PLAN

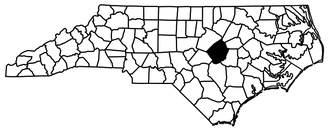

DOCUMENT NOT CONSIDERED FINAL UNLESS ALL SIGNATURES COMPLETED

NAD 83/ NSRS 2011

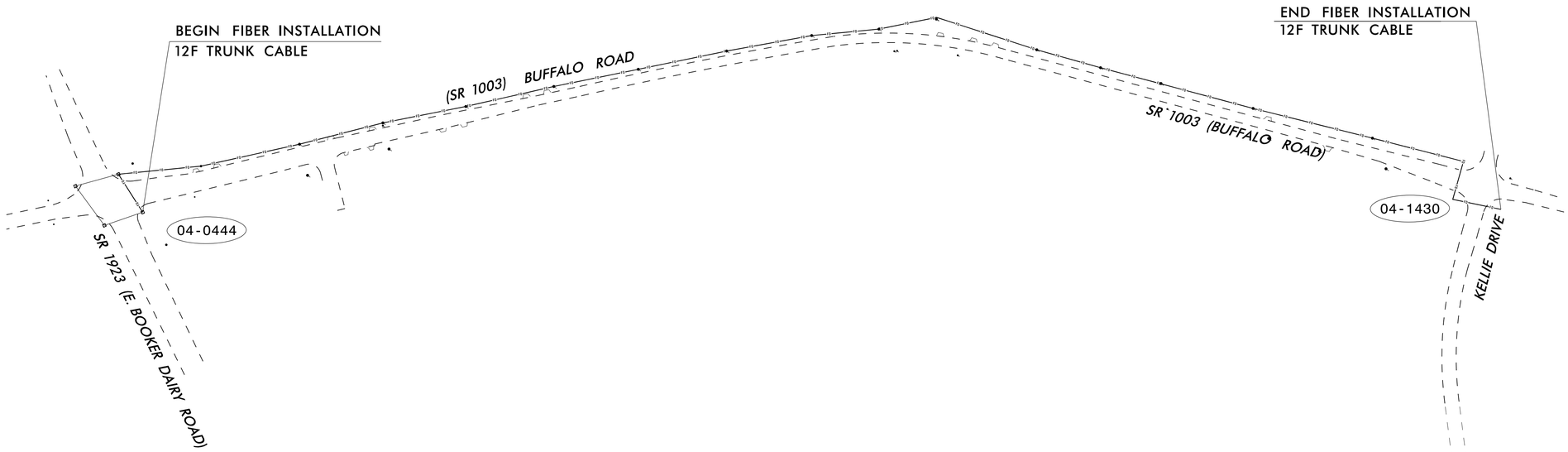

INDEX OF PLANS

SHEET NUMBER	LOCATION / DESCRIPTION
SCP-01	TITLE SHEET
SCP-02	SCHEMATIC ONE-LINE DIAGRAM
SCP-03	DRAWING FORMAT ITEMS - CONSTRUCTION NOTES, CABLE INSTALLATION NOTES
SCP-04 thru SCP-06	TRUNK FIBER INSTALLATION AERIAL FIBER CABLE ROUTING
SCP-07 and SCP-08	FIBER CABLE SPLICING DETAILS

ROADWAY STANDARD DRAWINGS

THE FOLLOWING ROADWAY STANDARDS AS APPEAR IN "ROADWAY STANDARD DRAWINGS" ROADWAY DESIGN UNIT - N.C. DEPARTMENT OF TRANSPORTATION - RALEIGH, N.C. DATED JANUARY 2012 ARE APPLICABLE TO THIS PROJECT AND BY REFERENCE HEREBY ARE CONSIDERED A PART OF THESE PLANS.

STD. No.	TITLE
1101.01	WORK ZONE WARNING SIGNS
1101.02	TEMPORARY LANE CLOSURE
1101.03	TEMPORARY SHOULDER CLOSURE
1715.01	UNDERGROUND CONDUIT
1716.01	JUNCTION BOXES
1730.01	FIBER OPTIC CABLE

LEGEND

XX-XXXX SIGNAL INVENTORY No.

NCDOT CONTACT:
TRANSPORTATION SAFETY AND MOBILITY
INTELLIGENT TRANSPORTATION SYSTEMS SECTION

I. Neal Avery
Signal Communication Project Engineer

Heidi Berggren, EI
Signal Communication Project Design Engineer

Stantec
Stantec Consulting Services Inc.
801 Jones Franklin Rd-Suite 300
Raleigh, NC 27606
Tel. 919.851.6866
Fax. 919.851.7024
www.stantec.com
License No. F-0672

Betsy L. Watson, PE
Senior Principal

Dean Harris
Senior Transportation Designer

Jim Ingram
Senior ITS Designer

Plans Prepared for:
DIVISION OF HIGHWAYS
750 N. Greenfield Parkway, Garner, NC 27529

DocuSigned by: Betsy L. Watson 35E67BB34F87...

SEAL 29449 PROFESSIONAL ENGINEER BETSY L. WATSON

1/10/2018

TIP PROJECT: U-5999

CONTRACT: DD00240

09/08/99

1/10/2018
U:\TI001854\transportation\U5999\Traffic\Signals\Design\ITS\U-5999 SCP Cover Sheet.dgn
jingram

DocuSign Envelope ID: BB2E245B-613E-4FFF-904E-00795DDFC54C

PROJECT REFERENCE NO.	SHEET NO.
U-5999	SCP-02

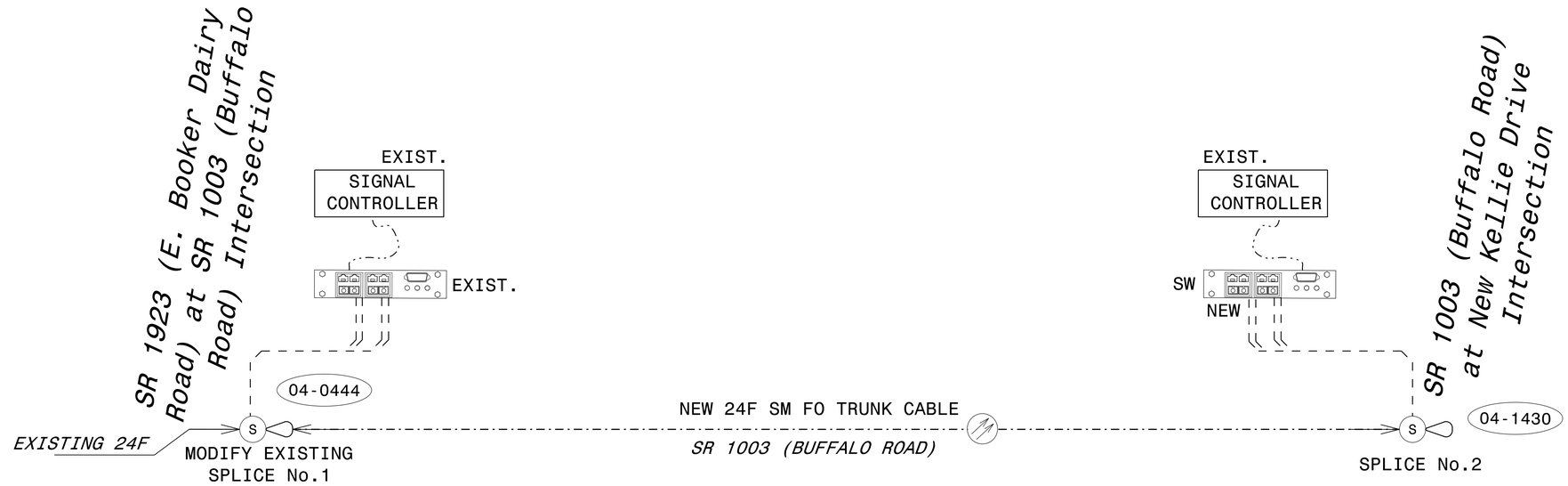

"NCDOT BACKBONE FIBER"
FOR SR 1003 (BUFFALO ROAD)
FINAL

DOCUMENT NOT CONSIDERED FINAL UNLESS ALL SIGNATURES COMPLETED

Stantec
Stantec Consulting Services Inc.
801 Jones Franklin Road
Suite 300
Raleigh, NC 27606
Tel. (919) 851-6866
Fax. (919) 851-7024
www.stantec.com
License No. F-0672

Prepared in the Offices of:
Transportation Mobility and Safety Division
STATE OF NORTH CAROLINA DEPARTMENT OF TRANSPORTATION
Intelligent Transportation Systems Section
750 N. Greenfield Pkwy., Garner, NC 27529

SCALE
NTS

ONE LINE DIAGRAM
SR 1003 (Buffalo Road)
FINAL

DIV 4	Johnston County	Smithfield
PLAN DATE: 2017	REVIEWED BY:	D. HARRIS
PREPARED BY: J. INGRAM	REVIEWED BY:	B. WATSON

REVISIONS	INIT.	DATE

SEAL
NORTH CAROLINA PROFESSIONAL SEAL 29449 ENGINEER BETSY L. WATSON

DocuSigned by:
Betsy L. Watson
35E07BB34F8743F...
SIGNATURE
1/10/2018
DATE

CADD Filename:

DocuSign Envelope ID: BB2E245B-613E-4FFF-904E-00795DDFC54C

PROJECT REFERENCE NO.	SHEET NO.
U-5999	SCP-03

1. INSTALL REA, PE – 22, SHIELDED, TWISTED PAIR COMMUNICATIONS CABLE
2. INSTALL REA, PE – 38, (FIGURE – 8) SHIELDED, TWISTED PAIR COMMUNICATIONS CABLE
3. INSTALL REA, PE – 39, (UNDERGROUND) SHIELDED, TWISTED PAIR COMMUNICATIONS CABLE
4. INSTALL SMFO CABLE
5. INSTALL MMFO CABLE
6. INSTALL FIBER OPTIC DROP CABLE
7. INSTALL TRACER WIRE
8. TRENCH
9. INSTALL PVC CONDUIT
10. INSTALL RIGID, GALVANIZED STEEL CONDUIT
11. INSTALL RIGID, GALVANIZED STEEL RISER WITH WEATHERHEAD
12A. INSTALL RIGID, GALVANIZED STEEL RISER WITH FIBER OPTIC CABLE SEAL
12B. INSTALL DROP CABLE THROUGH NIPPLE ON METAL POLE (SIGNAL OR JOINT USE). INSTALL HEAT SHRINK TUBING OVER NIPPLE.
13. INSTALL OUTER–DUCT POLYETHYLENE CONDUIT
14. INSTALL POLYETHYLENE CONDUIT
15. DIRECTIONAL DRILL CONDUIT
16. BORE AND JACK CONDUIT
17. INSTALL CABLE(S) IN EXISTING CONDUIT
18. INSTALL CABLE(S) IN NEW CONDUIT
19. INSTALL CABLE(S) IN EXISTING RISER
20. INSTALL CABLE(S) IN NEW RISER
21. INSTALL CABLE(S) IN EXISTING CONDUIT STUBOUTS
22. INSTALL NEW CONDUIT INTO EXISTING CABINET BASE (USE EXISTING CONDUIT STUB–OUTS WHEN AVAILABLE)
23. INSTALL NEW RISER INTO EXISTING CABINET BASE (USE EXISTING CONDUIT STUB–OUTS WHEN AVAILABLE)
24. INSTALL NEW CONDUIT INTO EXISTING POLE MOUNTED CABINET
25. INSTALL NEW RISER INTO EXISTING POLE MOUNTED CABINET
26. TERMINATE COMMUNICATIONS CABLE ON EXISTING TELEMETRY INTERFACE PANEL IN TRAFFIC SIGNAL CONTROLLER CABINET
27. INSTALL NEW TELEMETRY INTERFACE PANEL IN TRAFFIC SIGNAL CONTROLLER CABINET
28. INSTALL INTERCONNECT CENTER, PATCH PANEL, JUMPERS, AND FUSION SPLICE CABLE IN CABINET
29. INSTALL UNDERGROUND SPLICE ENCLOSURE
30. INSTALL AERIAL SPLICE ENCLOSURE
31. INSTALL POLE MOUNTED SPLICE CABINET
32. INSTALL BASE MOUNTED SPLICE CABINET (336) WITH EXTENDED BASE
33. REMOVE EXISTING SPLICE CABINET
34. INSTALL CABINET FOUNDATION
35. REMOVE EXISTING CABINET FOUNDATION
36. INSTALL CCTV CAMERA ASSEMBLY
37. INSTALL CCTV CAMERA WOOD POLE
38. INSTALL CCTV CAMERA METAL POLE AND FOUNDATION
39. INSTALL SPECIAL OVERSIZED JUNCTION BOX WITH 100 FEET OF COMMUNICATION CABLE
40. INSTALL OVERSIZED JUNCTION BOX
41. REUSE EXISTING METAL CCTV CAMERA POLE WITH NEW POLE FOUNDATION
42. INSTALL WOOD POLE
43. REMOVE EXISTING WOOD POLE
44. INSTALL AERIAL GUY ASSEMBLY
45. INSTALL STANDARD GUY ASSEMBLY
46. INSTALL SIDEWALK GUY ASSEMBLY
47. INSTALL MESSENGER CABLE
48. REMOVE EXISTING COMMUNICATIONS CABLE AND MESSENGER CABLE
49. REMOVE EXISTING COMMUNICATIONS CABLE
50. INSTALL ETHERNET NETWORK SWITCH
51. INSTALL CABLE STORAGE RACKS (SNOW SHOES) AND STORE 100 FEET OF CABLE
52. INSTALL DELINEATOR MARKER
53. STORE 50 FEET OF COMMUNICATIONS CABLE
54. LASH CABLE(S) TO EXISTING SIGNAL/COMMUNICATIONS CABLE
55. LASH CABLE(S) TO EXISTING MESSENGER CABLE
56. LASH CABLE(S) TO NEW MESSENGER CABLE
57. MODIFY EXISTING ELECTRICAL SERVICE
58. INSTALL NEW ELECTRICAL SERVICE FOR DMS/CCTV
59. INSTALL NEW BASE MOUNTED CABINET (336)
60. SEAL ALL CONDUIT ENTERING JUNCTION BOXES AND SIGNAL/CCTV CONTROL CABINETS WITH MOLDABLE DUCT SEAL
61. CONTRACTOR SHALL INSTALL NEW MESSENGER WIRE AND NEW FO TRUNK CABLE TO METAL SIGNAL POLE, ROUTE CABLE(S) INSIDE METAL POLE TO JUNCTION BOX AT BASE OF POLE AND ROUTE TO SIGNAL CABINET. DO NOT ALLOW FIBER DROP CABLE TO INTERFERE WITH SIGNAL CABLES.
62. MODIFY EXISTING SPLICE ENCLOSURE AND RESEAL

LEGEND

- FO — NEW AERIAL FIBER OPTIC COMMUNICATIONS CABLE
- TWIST PR — NEW TWISTED PAIR COMMUNICATIONS CABLE
- EXI — EXISTING COMMUNICATIONS CABLE
- EXISTING FENCE LINE
- PROPOSED FENCE LINE
- PROPOSED RIGHT–OF–WAY LINE
- EXISTING WATER LINE /WETLANDS
- NEW FIBER OPTIC COMMUNINCATIONS CABLE IN NEW CONDUIT
- NEW FIBER OPTIC COMMUNINCATIONS CABLE IN EXISTING CONDUIT
- DD — NEW DIRECTIONAL DRILLED CONDUIT
- B&J — NEW BORED AND JACKED CONDUIT
- NEW JUNCTION BOX
- EXISTING JUNCTION BOX
- NEW WOOD POLE
- EXISTING WOOD POLE
- S — NEW AERIAL SPLICE ENCLOSURE
- NEW METAL SIGNAL POLE
- S — NEW UNDERGROUND SPLICE CLOSURE
- EXISTING METAL SIGNAL POLE
- EXISTING CCTV CAMERA ASSEMBLY
- NEW STANDARD GUY ASSEMBLY
- NEW STANDARD GUY USING EXISTING ANCHOR
- NEW SIDEWALK GUY ASSEMBLY
- NEW CABLE STORAGE RACKS (SNOW SHOES)
- EXISTING CONTROLLER AND CABINET
- PROPOSED CONTROLLER CABINET
- S — EXISTING SPLICE CABINET
- EXISTING DYNAMIC MESSAGE SIGN (DMS) ON SINGLE STEEL POLE
- M — EXISTING MASTER CONTROLLER AND CABINET
- SP — SIGNAL POLE
- XXXX–XX — SIGNAL INVENTORY NUMBER
- YAGI ANTENNA (DOUBLE) FOR REPEATER OPERATION
- YAGI ANTENNA (SINGLE)
- OMNI ANTENNA
- —REM— EXISTING UTILITY CABLE TO BE RELOCATED OR REMOVED
- PP — EXISTING POWER PEDESTAL

CONSTRUCTION NOTE SYMBOLOGY KEY

- XX — INDICATES NUMBER OF CABLES, LOOPS, ETC.
- XX — INDICATES NUMBER OF FIBERS PER CABLE, TWISTED PAIRS PER CABLE, ETC.
- XX — INDICATES NUMBER OF RISER(S)/CONDUIT(S)
- XX — INDICATES DIAMETER OF RISER(S)/CONDUIT(S) (INCH)

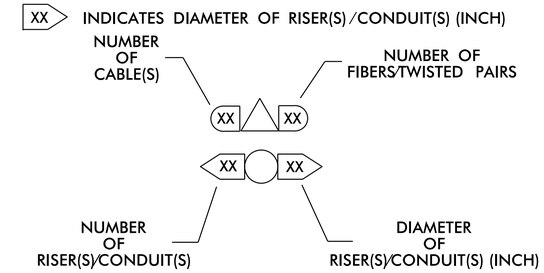

Stantec
Stantec Consulting Services Inc.
801 Jones Franklin Road
Suite 300
Raleigh, NC 27606
Tel. (919) 851-6866
Fax. (919) 851-7024
www.stantec.com
License No. F-0672

Prepared for the Offices of:
STATE OF NORTH CAROLINA DEPARTMENT OF TRANSPORTATION
750 N. Greenfield Pkwy., Garner, NC 27529

SCALE 0 N/A

SR 1003 (BUFFALO ROAD) ITS
FIBER CABLE ROUTE
CONSTRUCTION NOTES

PLAN DATE: 2017	REVIEWED BY: D. HARRIS
PREPARED BY: J. INGRAM	REVIEWED BY: B. WATSON

REVISIONS	INIT.	DATE

SEAL
NORTH CAROLINA PROFESSIONAL SEAL 29449 ENGINEER BETSY L. WATSON
DocuSigned by: Betsy L. Watson 1/10/2018
SIGNATURE DATE
CADD FILE NAME

DocuSign Envelope ID: BB2E245B-613E-4FFF-904E-00795DDFC54C

PROJECT REFERENCE NO.	SHEET NO.
U-5999	SCP-04

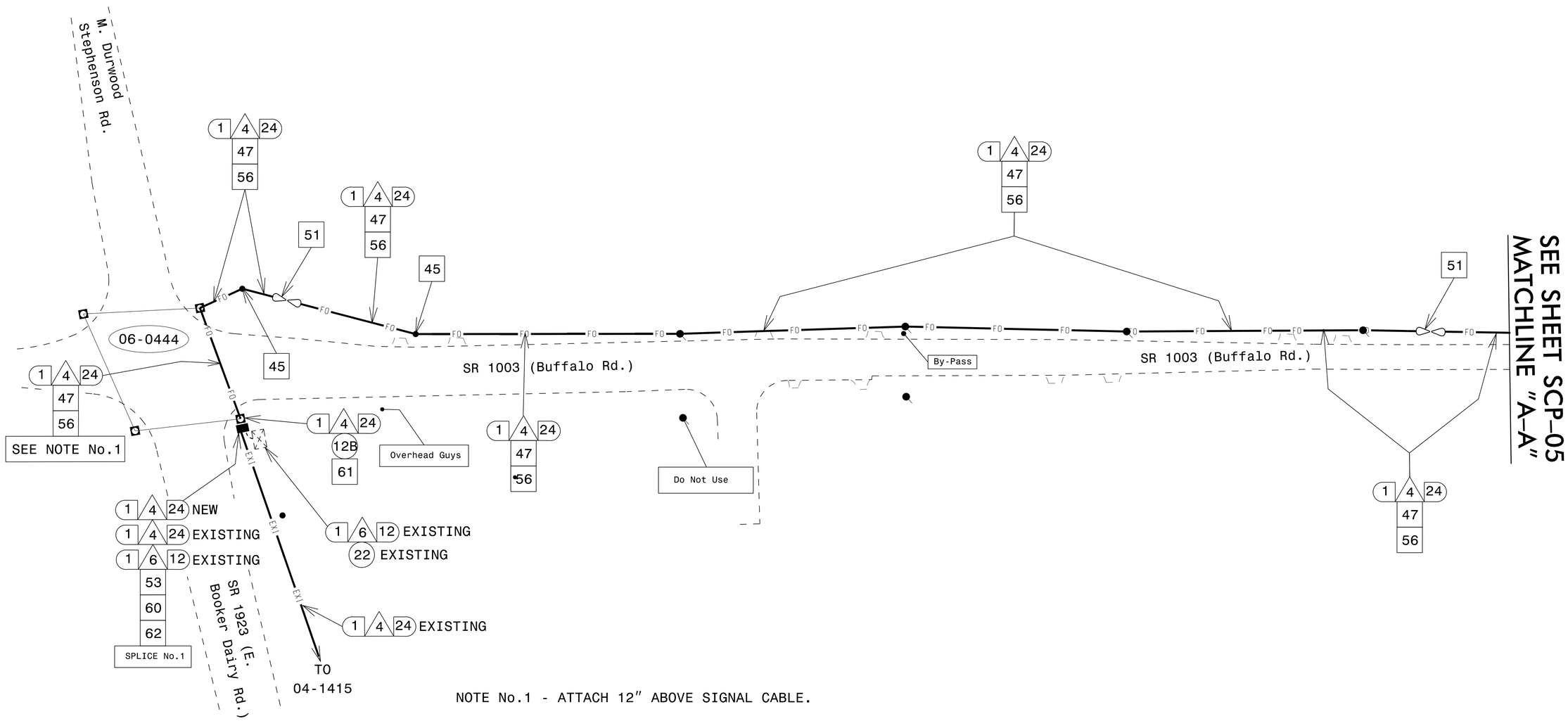

NOTE No.1 - ATTACH 12" ABOVE SIGNAL CABLE.

1. INSTALL REA, PE – 22, SHIELDED, TWISTED PAIR COMMUNICATIONS CABLE
2. INSTALL REA, PE – 38, (FIGURE – 8) SHIELDED, TWISTED PAIR COMMUNICATIONS CABLE
3. INSTALL REA, PE – 39, (UNDERGROUND) SHIELDED, TWISTED PAIR COMMUNICATIONS CABLE
4. INSTALL SMFO CABLE
5. INSTALL MMFO CABLE
6. INSTALL FIBER OPTIC DROP CABLE
7. INSTALL TRACER WIRE
8. TRENCH
9. INSTALL PVC CONDUIT
10. INSTALL RIGID, GALVANIZED STEEL CONDUIT
11. INSTALL RIGID, GALVANIZED STEEL RISER WITH WEATHERHEAD
12A. INSTALL RIGID, GALVANIZED STEEL RISER WITH FIBER OPTIC CABLE SEAL
12B. INSTALL DROP CABLE THROUGH NIPPLE ON METAL SIGNAL POLE. INSTALL HEAT SHRINK TUBING OVER NIPPLE.
13. INSTALL OUTER-DUCT POLYETHYLENE CONDUIT
14. INSTALL POLYETHYLENE CONDUIT
15. DIRECTIONAL DRILL CONDUIT
16. BORE AND JACK CONDUIT
17. INSTALL CABLE(S) IN EXISTING CONDUIT
18. INSTALL CABLE(S) IN NEW CONDUIT
19. INSTALL CABLE(S) IN EXISTING RISER
20. INSTALL CABLE(S) IN NEW RISER
21. INSTALL CABLE(S) IN EXISTING CONDUIT STUBOUTS
22. INSTALL NEW CONDUIT INTO EXISTING CABINET BASE (USE EXISTING CONDUIT STUB-OUTS WHEN AVAILABLE)
23. INSTALL NEW RISER INTO EXISTING CABINET BASE (USE EXISTING CONDUIT STUB-OUTS WHEN AVAILABLE)
24. INSTALL NEW CONDUIT INTO EXISTING POLE MOUNTED CABINET
25. INSTALL NEW RISER INTO EXISTING POLE MOUNTED CABINET
26. TERMINATE COMMUNICATIONS CABLE ON EXISTING TELEMETRY INTERFACE PANEL IN TRAFFIC SIGNAL CONTROLLER CABINET
27. INSTALL NEW TELEMETRY INTERFACE PANEL IN TRAFFIC SIGNAL CONTROLLER CABINET
28. INSTALL INTERCONNECT CENTER, PATCH PANEL, JUMPERS, AND FUSION SPLICE CABLE IN CABINET
29. INSTALL UNDERGROUND SPLICE ENCLOSURE
30. INSTALL AERIAL SPLICE ENCLOSURE
31. INSTALL POLE MOUNTED SPLICE CABINET
32. INSTALL BASE MOUNTED SPLICE CABINET (336) WITH EXTEND BASE
33. REMOVE EXISTING SPLICE CABINET
34. INSTALL CABINET FOUNDATION
35. REMOVE EXISTING CABINET FOUNDATION
36. INSTALL CCTV CAMERA ASSEMBLY
37. INSTALL CCTV CAMERA WOOD POLE
38. INSTALL CCTV CAMERA METAL POLE AND FOUNDATION
39. INSTALL SPECIAL OVERSIZED JUNCTION BOX WITH 100 FEET OF COMMUNICATIONS CABLE
40. INSTALL OVERSIZED JUNCTION BOX
41. REUSE EXISTING METAL CCTV CAMERA POLE WITH NEW POLE FOUNDATION
42. INSTALL WOOD POLE
43. REMOVE EXISTING WOOD POLE
44. INSTALL AERIAL GUY ASSEMBLY
45. INSTALL STANDARD GUY ASSEMBLY
46. INSTALL SIDEWALK GUY ASSEMBLY
47. INSTALL MESSENGER CABLE
48. REMOVE EXISTING COMMUNICATIONS CABLE AND MESSENGER CABLE
49. REMOVE EXISTING COMMUNICATIONS CABLE
50. INSTALL ETHERNET NETWORK SWITCH
51. INSTALL CABLE STORAGE RACKS (SNOW SHOES) AND STORE 100 FEET OF CABLE
52. INSTALL DELINEATOR MARKER
53. STORE 50 FEET OF COMMUNICATIONS CABLE
54. LASH CABLE(S) TO EXISTING SIGNAL / COMMUNICATIONS CABLE
55. LASH CABLE(S) TO EXISTING MESSENGER CABLE
56. LASH CABLE(S) TO NEW MESSENGER CABLE
57. MODIFY EXISTING ELECTRICAL SERVICE
58. INSTALL NEW ELECTRICAL SERVICE FOR DMS/CCTV
59. INSTALL NEW BASE MOUNTED CABINET (336)
60. SEAL ALL CONDUIT ENTERING JUNCTION BOXES AND SIGNAL/CCTV CONTROL CABINETS WITH MOLDABLE DUCT SEAL
61. CONTRACTOR SHALL INSTALL NEW MESSENGER WIRE AND NEW FO CABLE TO METAL SIGNAL POLE. ROUTE CABLE(S) INSIDE METAL POLE TO JUNCTION BOX AT BASE OF POLE AND ROUTE TO SIGNAL CABINET. DO NOT ALLOW FIBER DROP CABLE TO INTERFERE WITH SIGNAL CABLES.
62. MODIFY EXISTING SPLICE ENCLOSURE AND RESEAL

NOTE: ALL WOOD POLES THAT WILL HAVE A NEW ATTACHMENT REQUIRE A STANDARD GUY ASSEMBLY, NO SIDEWALK GUYS ARE TO BE INSTALLED.

Stantec
Stantec Consulting Services Inc.
801 Jones Franklin Road
Suite 300
Raleigh, NC 27606
Tel. (919) 851-6866
Fax. (919) 851-7024
www.stantec.com
License No. F-0672

Prepared for the Offices of: Transportation Mobility and Safety Division — State of North Carolina Department of Transportation — Integrated Transportation Solutions
750 N. Greenfield Pkwy., Garner, NC 27529

(SR 1003) BUFFALO ROAD

ITS FIBER CABLE ROUTING

Division 04 Johnston County Smithfield

PLAN DATE:	2017	REVIEWED BY:	D. HARRIS
PREPARED BY:	J. INGRAM	REVIEWED BY:	B. WATSON

SCALE	REVISIONS	INIT.	DATE
NTS			

SEAL: NORTH CAROLINA PROFESSIONAL SEAL 29449 ENGINEER BETSY L. WATSON

DocuSign Envelope ID: 3EC67B0A-F8A3-4 — Betsy L. Watson — 1/10/2018
SIGNATURE DATE

CADD FILE NAME

DocuSign Envelope ID: BB2E245B-613E-4FFF-904E-00795DDFC54C

PROJECT REFERENCE NO.	SHEET NO.
U-5999	SCP-05

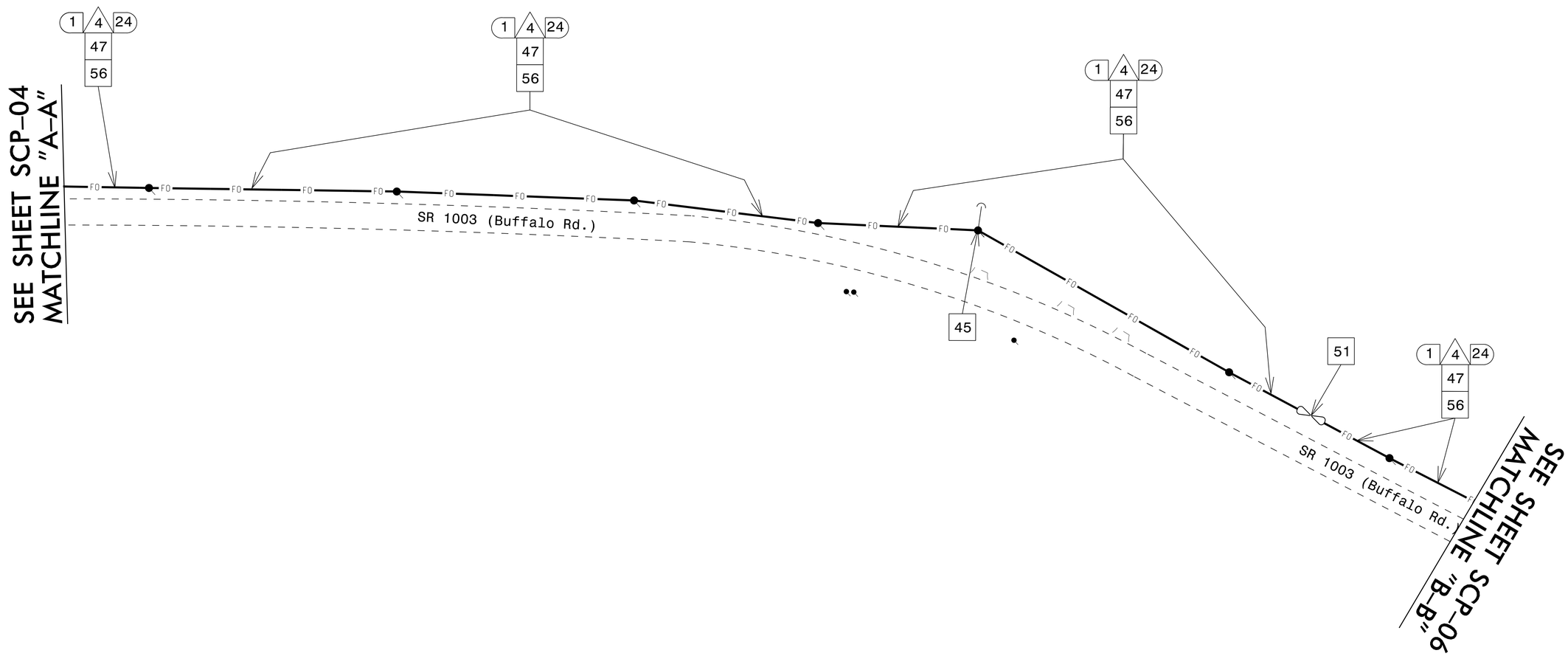

1. INSTALL REA, PE – 22, SHIELDED, TWISTED PAIR COMMUNICATIONS CABLE
2. INSTALL REA, PE – 38, (FIGURE – 8) SHIELDED, TWISTED PAIR COMMUNICATIONS CABLE
3. INSTALL REA, PE – 39, (UNDERGROUND) SHIELDED, TWISTED PAIR COMMUNICATIONS CABLE
4. INSTALL SMFO CABLE
5. INSTALL MMFO CABLE
6. INSTALL FIBER OPTIC DROP CABLE
7. INSTALL TRACER WIRE
8. TRENCH
9. INSTALL PVC CONDUIT
10. INSTALL RIGID, GALVANIZED STEEL CONDUIT
11. INSTALL RIGID, GALVANIZED STEEL RISER WITH WEATHERHEAD
12A. INSTALL RIGID, GALVANIZED STEEL RISER WITH FIBER OPTIC CABLE SEAL
12B. INSTALL DROP CABLE THROUGH NIPPLE ON METAL SIGNAL POLE. INSTALL HEAT SHRINK TUBING OVER NIPPLE.
13. INSTALL OUTER-DUCT POLYETHYLENE CONDUIT
14. INSTALL POLYETHYLENE CONDUIT
15. DIRECTIONAL DRILL CONDUIT
16. BORE AND JACK CONDUIT
17. INSTALL CABLE(S) IN EXISTING CONDUIT
18. INSTALL CABLE(S) IN NEW CONDUIT
19. INSTALL CABLE(S) IN EXISTING RISER
20. INSTALL CABLE(S) IN NEW RISER
21. INSTALL CABLE(S) IN EXISTING CONDUIT STUBOUTS
22. INSTALL NEW CONDUIT INTO EXISTING CABINET BASE (USE EXISTING CONDUIT STUB-OUTS WHEN AVAILABLE)
23. INSTALL NEW RISER INTO EXISTING CABINET BASE (USE EXISTING CONDUIT STUB-OUTS WHEN AVAILABLE)
24. INSTALL NEW CONDUIT INTO EXISTING POLE MOUNTED CABINET
25. INSTALL NEW RISER INTO EXISTING POLE MOUNTED CABINET
26. TERMINATE COMMUNICATIONS CABLE ON EXISTING TELEMETRY INTERFACE PANEL IN TRAFFIC SIGNAL CONTROLLER CABINET
27. INSTALL NEW TELEMETRY INTERFACE PANEL IN TRAFFIC SIGNAL CONTROLLER CABINET
28. INSTALL INTERCONNECT CENTER, PATCH PANEL, JUMPERS, AND FUSION SPLICE CABLE IN CABINET
29. INSTALL UNDERGROUND SPLICE ENCLOSURE
30. INSTALL AERIAL SPLICE ENCLOSURE
31. INSTALL POLE MOUNTED SPLICE CABINET
32. INSTALL BASE MOUNTED SPLICE CABINET (336) WITH EXTEND BASE
33. REMOVE EXISTING SPLICE CABINET
34. INSTALL CABINET FOUNDATION
35. REMOVE EXISTING CABINET FOUNDATION
36. INSTALL CCTV CAMERA ASSEMBLY
37. INSTALL CCTV CAMERA WOOD POLE
38. INSTALL CCTV CAMERA METAL POLE AND FOUNDATION
39. INSTALL SPECIAL OVERSIZED JUNCTION BOX WITH 100 FEET OF COMMUNICATIONS CABLE
40. INSTALL OVERSIZED JUNCTION BOX
41. REUSE EXISTING METAL CCTV CAMERA POLE WITH NEW POLE FOUNDATION
42. INSTALL WOOD POLE
43. REMOVE EXISTING WOOD POLE
44. INSTALL AERIAL GUY ASSEMBLY
45. INSTALL STANDARD GUY ASSEMBLY
46. INSTALL SIDEWALK GUY ASSEMBLY
47. INSTALL MESSENGER CABLE
48. REMOVE EXISTING COMMUNICATIONS CABLE AND MESSENGER CABLE
49. REMOVE EXISTING COMMUNICATIONS CABLE
50. INSTALL ETHERNET NETWORK SWITCH
51. INSTALL CABLE STORAGE RACKS (SNOW SHOES) AND STORE 100 FEET OF CABLE
52. INSTALL DELINEATOR MARKER
53. STORE 50 FEET OF COMMUNICATIONS CABLE
54. LASH CABLE(S) TO EXISTING SIGNAL / COMMUNICATIONS CABLE
55. LASH CABLE(S) TO EXISTING MESSENGER CABLE
56. LASH CABLE(S) TO NEW MESSENGER CABLE
57. MODIFY EXISTING ELECTRICAL SERVICE
58. INSTALL NEW ELECTRICAL SERVICE FOR DMS/CCTV
59. INSTALL NEW BASE MOUNTED CABINET (336)
60. SEAL ALL CONDUIT ENTERING JUNCTION BOXES AND SIGNAL/CCTV CONTROL CABINETS WITH MOLDABLE DUCT SEAL
61. CONTRACTOR SHALL INSTALL NEW MESSENGER WIRE AND NEW FO CABLE TO METAL SIGNAL POLE, ROUTE CABLE(S) INSIDE METAL POLE TO JUNCTION BOX AT BASE OF POLE AND ROUTE TO SIGNAL CABINET. DO NOT ALLOW FIBER DROP CABLE TO INTERFERE WITH SIGNAL CABLES.
62. MODIFY EXISTING SPLICE ENCLOSURE AND RESEAL

NOTE: ALL WOOD POLES THAT WILL HAVE A NEW ATTACHMENT REQUIRE A STANDARD GUY ASSEMBLY, NO SIDEWALK GUYS ARE TO BE INSTALLED.

Stantec
Stantec Consulting Services Inc.
801 Jones Franklin Road
Suite 300
Raleigh, NC 27606
Tel. (919) 851-6866
Fax. (919) 851-7024
www.stantec.com
License No. F-0672

Prepared for the Offices of:
Transportation Mobility and Safety Division
STATE OF NORTH CAROLINA DEPARTMENT OF TRANSPORTATION
Integrated Transportation Solutions
750 N. Greenfield Pkwy., Garner, NC 27529

(SR 1003) BUFFALO ROAD

ITS FIBER CABLE ROUTING

Division 04 Johnston County Smithfield

PLAN DATE:	2017	REVIEWED BY:	D. HARRIS
PREPARED BY:	J. INGRAM	REVIEWED BY:	B. WATSON

SCALE: NTS

REVISIONS	INIT.	DATE

SEAL
NORTH CAROLINA PROFESSIONAL SEAL 29449 ENGINEER BETSY L. WATSON

DocuSigned by: Betsy L. Watson
SIGNATURE 1/10/2018 DATE

CADD FILE NAME

DocuSign Envelope ID: BB2E245B-613E-4FFF-904E-00795DDFC54C

PROJECT REFERENCE NO.	SHEET NO.
U-5999	SCP-06

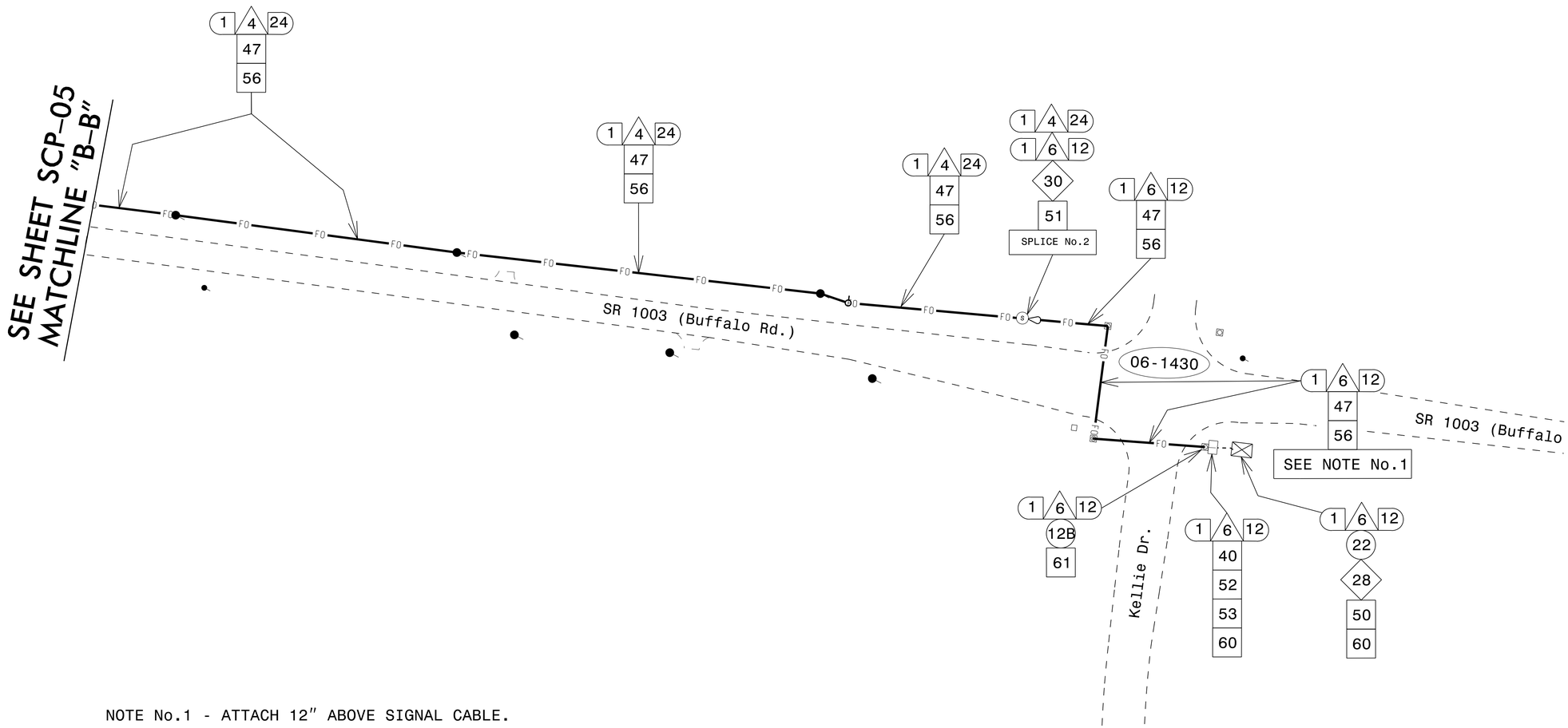

NOTE No.1 - ATTACH 12″ ABOVE SIGNAL CABLE.

1. INSTALL REA, PE – 22, SHIELDED, TWISTED PAIR COMMUNICATIONS CABLE
2. INSTALL REA, PE – 38, (FIGURE – 8) SHIELDED, TWISTED PAIR COMMUNICATIONS CABLE
3. INSTALL REA, PE – 39, (UNDERGROUND) SHIELDED, TWISTED PAIR COMMUNICATIONS CABLE
4. INSTALL SMFO CABLE
5. INSTALL MMFO CABLE
6. INSTALL FIBER OPTIC DROP CABLE
7. INSTALL TRACER WIRE
8. TRENCH
9. INSTALL PVC CONDUIT
10. INSTALL RIGID, GALVANIZED STEEL CONDUIT
11. INSTALL RIGID, GALVANIZED STEEL RISER WITH WEATHERHEAD
12A. INSTALL RIGID, GALVANIZED STEEL RISER WITH FIBER OPTIC CABLE SEAL
12B. INSTALL DROP CABLE THROUGH NIPPLE ON METAL SIGNAL POLE. INSTALL HEAT SHRINK TUBING OVER NIPPLE.
13. INSTALL OUTER-DUCT POLYETHYLENE CONDUIT
14. INSTALL POLYETHYLENE CONDUIT
15. DIRECTIONAL DRILL CONDUIT
16. BORE AND JACK CONDUIT
17. INSTALL CABLE(S) IN EXISTING CONDUIT
18. INSTALL CABLE(S) IN NEW CONDUIT
19. INSTALL CABLE(S) IN EXISTING RISER
20. INSTALL CABLE(S) IN NEW RISER
21. INSTALL CABLE(S) IN EXISTING CONDUIT STUBOUTS
22. INSTALL NEW CONDUIT INTO EXISTING CABINET BASE (USE EXISTING CONDUIT STUB-OUTS WHEN AVAILABLE)
23. INSTALL NEW RISER INTO EXISTING CABINET BASE (USE EXISTING CONDUIT STUB-OUTS WHEN AVAILABLE)
24. INSTALL NEW CONDUIT INTO EXISTING POLE MOUNTED CABINET
25. INSTALL NEW RISER INTO EXISTING POLE MOUNTED CABINET
26. TERMINATE COMMUNICATIONS CABLE ON EXISTING TELEMETRY INTERFACE PANEL IN TRAFFIC SIGNAL CONTROLLER CABINET
27. INSTALL NEW TELEMETRY INTERFACE PANEL IN TRAFFIC SIGNAL CONTROLLER CABINET
28. INSTALL INTERCONNECT CENTER, PATCH PANEL, JUMPERS, AND FUSION SPLICE CABLE IN CABINET
29. INSTALL UNDERGROUND SPLICE ENCLOSURE
30. INSTALL AERIAL SPLICE ENCLOSURE
31. INSTALL POLE MOUNTED SPLICE CABINET
32. INSTALL BASE MOUNTED SPLICE CABINET (336) WITH EXTEND BASE
33. REMOVE EXISTING SPLICE CABINET
34. INSTALL CABINET FOUNDATION
35. REMOVE EXISTING CABINET FOUNDATION
36. INSTALL CCTV CAMERA ASSEMBLY
37. INSTALL CCTV CAMERA WOOD POLE
38. INSTALL CCTV CAMERA METAL POLE AND FOUNDATION
39. INSTALL SPECIAL OVERSIZED JUNCTION BOX WITH 100 FEET OF COMMUNICATIONS CABLE
40. INSTALL OVERSIZED JUNCTION BOX
41. REUSE EXISTING METAL CCTV CAMERA POLE WITH NEW POLE FOUNDATION
42. INSTALL WOOD POLE
43. REMOVE EXISTING WOOD POLE
44. INSTALL AERIAL GUY ASSEMBLY
45. INSTALL STANDARD GUY ASSEMBLY
46. INSTALL SIDEWALK GUY ASSEMBLY
47. INSTALL MESSENGER CABLE
48. REMOVE EXISTING COMMUNICATIONS CABLE AND MESSENGER CABLE
49. REMOVE EXISTING COMMUNICATIONS CABLE
50. INSTALL ETHERNET NETWORK SWITCH
51. INSTALL CABLE STORAGE RACKS (SNOW SHOES) AND STORE 100 FEET OF CABLE
52. INSTALL DELINEATOR MARKER
53. STORE 50 FEET OF COMMUNICATIONS CABLE
54. LASH CABLE(S) TO EXISTING SIGNAL / COMMUNICATIONS CABLE
55. LASH CABLE(S) TO EXISTING MESSENGER CABLE
56. LASH CABLE(S) TO NEW MESSENGER CABLE
57. MODIFY EXISTING ELECTRICAL SERVICE
58. INSTALL NEW ELECTRICAL SERVICE FOR DMS/CCTV
59. INSTALL NEW BASE MOUNTED CABINET (336)
60. SEAL ALL CONDUIT ENTERING JUNCTION BOXES AND SIGNAL/CCTV CONTROL CABINETS WITH MOLDABLE DUCT SEAL
61. CONTRACTOR SHALL INSTALL NEW MESSENGER WIRE AND NEW FO CABLE TO METAL SIGNAL POLE, ROUTE CABLE(S) INSIDE METAL POLE TO JUNCTION BOX AT BASE OF POLE AND ROUTE TO SIGNAL CABINET. DO NOT ALLOW FIBER DROP CABLE TO INTERFERE WITH SIGNAL CABLES.
62. MODIFY EXISTING SPLICE ENCLOSURE AND RESEAL

NOTE: ALL WOOD POLES THAT WILL HAVE A NEW ATTACHMENT REQUIRE A STANDARD GUY ASSEMBLY, NO SIDEWALK GUYS ARE TO BE INSTALLED.

Stantec
Stantec Consulting Services Inc.
801 Jones Franklin Road
Suite 300
Raleigh, NC 27606
Tel. (919) 851-6866
Fax. (919) 851-7024
www.stantec.com
License No. F-0672

Prepared for the Offices of:
Transportation Mobility and Safety Division
Intelligent Transportation Solutions
STATE OF NORTH CAROLINA DEPARTMENT OF TRANSPORTATION
750 N. Greenfield Pkwy., Garner, NC 27529

(SR 1003) BUFFALO ROAD

ITS FIBER CABLE ROUTING

Division 04 Johnston County Smithfield

PLAN DATE: 2017	REVIEWED BY: D. HARRIS
PREPARED BY: J. INGRAM	REVIEWED BY: B. WATSON

SCALE: NTS

REVISIONS	INIT.	DATE

SEAL
NORTH CAROLINA PROFESSIONAL SEAL 29449 ENGINEER BETSY L. WATSON

DocuSign Envelope ID: 36E67DB34F8740F...
SIGNATURE 1/10/2018 DATE

CADD FILE NAME

DocuSign Envelope ID: BB2E245B-613E-4FFF-904E-00795DDFC54C

FIBER OPTIC CABLE SPLICE PLAN

PROJECT REFERENCE NO.	SHEET NO.
U-5999	SCP-07

INTERSECTION 04–0444
SR 1003 (BUFFALO RD) AT
SR 1923 (E. BOOKER DAIRY RD)
EXISTING CONTROLLER/CABINET

Notes:

This Represenitive of the Existing Conditions in the Signal Controller Cabinet.

LEGEND

O = EXISTING SPLICE

C = CAP IN TRAY

BUFFER TUBE = SPLICE OR EXPRESS AS NOTED

COLOR CODE
TIA/EIA 598–A

(1) BLUE	(7) RED
(2) ORANGE	(8) BLACK
(3) GREEN	(9) YELLOW
(4) BROWN	(10) VIOLET
(5) SLATE	(11) ROSE
(6) WHITE	(12) AQUA

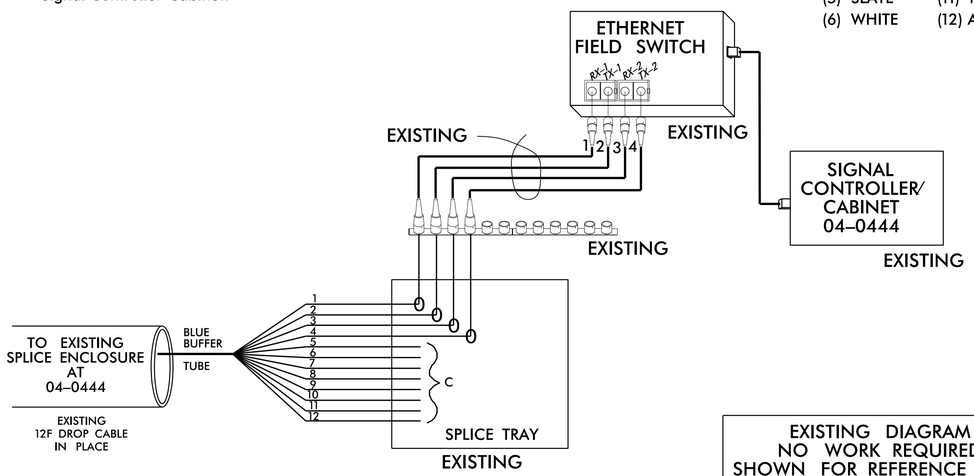

EXISTING DIAGRAM
NO WORK REQUIRED
SHOWN FOR REFERENCE ONLY

INTERSECTION 04–0444
SR 1003 (BUFFALO RD) AT
SR 1923 (E. BOOKER DAIRY RD)
EXISTING SPLICE ENCLOSURE
SPLICE No.1

Notes:

Unused fibers left coiled and stored in splice tray.
Unused Buffer Tubes left coiled and stored in splice tray.

COLOR CODE
TIA/EIA 598–A

(1) BLUE	(7) RED
(2) ORANGE	(8) BLACK
(3) GREEN	(9) YELLOW
(4) BROWN	(10) VIOLET
(5) SLATE	(11) ROSE
(6) WHITE	(12) AQUA

LEGEND

X = FUSION SPLICE

C = CAP IN TRAY

EXPRESS = EXPRESS FIBER THROUGH WITHOUT CUTTING

BUFFER TUBE = SPLICE OR EXPRESS AS NOTED

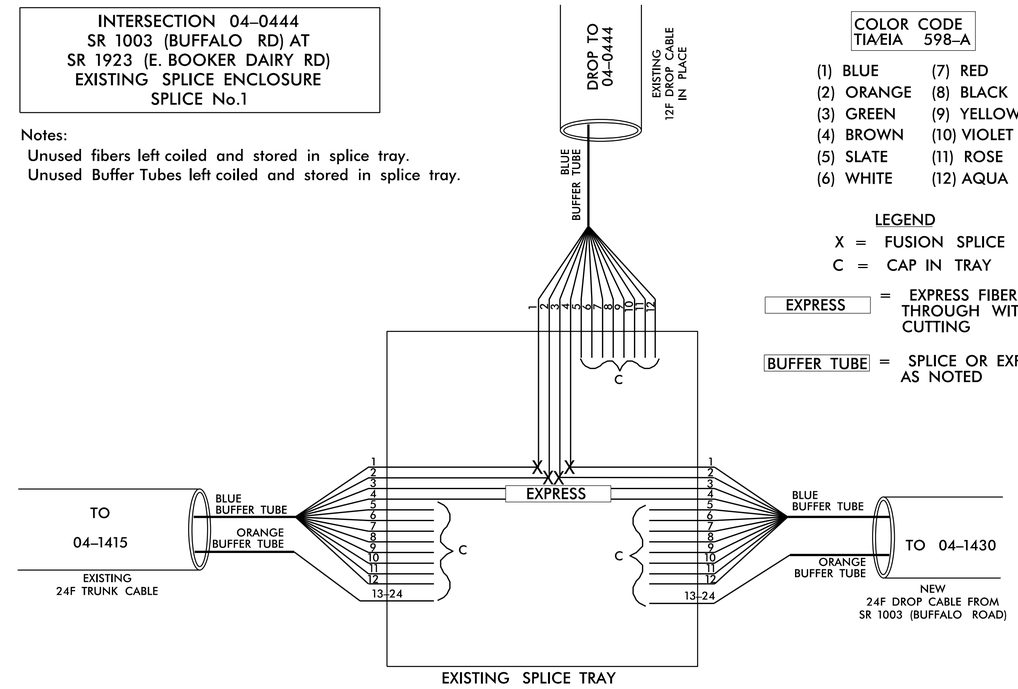

1) FIVE (5) DAYS PRIOR TO BEGINNING WORK ON THE SIGNAL SYSTEM, CONTACT THE DIVISION 4 DEPUTY TRAFFIC ENGINEER, RUSSELL BROADWELL, AT (252)296–3541 TO ARRANGE FOR THE DIVISION TO PROGRAM THE NEW FIELD ETHERNET SWITCHES WITH THE NECESSARY NETWORK CONFIGURATION DATA, INCLUDING BUT NOT LIMITED TO THE FOLLOWING:

   1.) THE PROJECT IP ADDRESS, DEFAULT GATEWAY, SUBNET MASK AND VLAN ID INFORMATION.
   2.) NOTIFY THE DEPUTY TRAFFIC ENGINEER AFTER ALL WORK IS PERFORMED TO ENSURE THAT ALL FIBER CIRCUITS ARE FUNCTIONING PROPERLY.
   3.) WORK IS NOT COMPLETE UNTIL THE SYSTEM IS OPERATIONAL.

2) ETHERNET SWITCH TERMINATION CONFIGURATIONS ARE GENERIC. CONTRACTOR IS RESPONSIBLE FOR DETERMINING AND ENSURING PROPER TERMINATIONS.

3) INCLUDE ON THE COVER OF EACH SPLICE TRAY THE FOLLOWING:

REFERENCE SECTION 1731 "FIBER OPTIC SPLICE ENCLOSURE"
   1.) SPLICE LOCATION
   2.) DATE
   3.) COMPANY NAME
   4.) NAME OF INDIVIDUAL PERFORMING THE SPLICING

PRIOR TO INSTALLING THE COVER ON THE SPLICE TRAY TAKE A DIGITAL PHOTOGRAPH SHOWING THE SPLICE TRAY AND INFORMATION SHOWN ABOVE (1–4) AND SUBMIT PHOTOGRAPH ALONG WITH OTDR TEST RESULTS.

NOTES

1. UNUSED FIBER SHALL BE LEFT COILED AND STORED IN THE SPLICE TRAY.
2. UNUSED BUFFER TUBES SHALL BE LEFT COILED AND STORED IN THE SPLICE TRAY.
3. ETHERNET TERMINATION CONFIGURATIONS ARE GENERIC. THE CONTRACTOR SHALL BE RESPONSIBLE FOR DETERMINING AND ENSURING PROPER TERMINATION.

FINAL

Stantec
Stantec Consulting Services Inc.
801 Jones Franklin Road
Suite 300
Raleigh, NC 27606
Tel. (919) 851-6866
Fax. (919) 851-7024
www.stantec.com
License No. F-0672

Prepared for the Offices of:
Transportation Mobility and Safety Division
NORTH CAROLINA DEPARTMENT OF TRANSPORTATION
Integrity Teamwork Transportation Service
750 N. Greenfield Pkwy., Garner, NC 27529

SCALE
0
N/A

SR 1003 (BUFFALO ROAD) AT
SR 1923 (E. BOOKER DAIRY ROAD)
FIBER CABLE SPLICING DETAILS
INTERSECTION 04-0444

PLAN DATE:	2017	REVIEWED BY:	D. HARRIS
PREPARED BY:	J. INGRAM	REVIEWED BY:	B. WATSON

REVISIONS	INIT.	DATE

SEAL
NORTH CAROLINA PROFESSIONAL SEAL 29449 ENGINEER BESSY L. WATSON
DocuSigned by: Betsy L. Watson
35E67B834F8743F...
SIGNATURE
1/10/2018
DATE
CADD FILE NAME

DocuSign Envelope ID: BB2E245B-613E-4FFF-904E-00795DDFC54C

FIBER OPTIC CABLE SPLICE PLAN

PROJECT REFERENCE NO.	SHEET NO.
U-5999	SCP-08

INTERSECTION 04–1430
SR 1003 (BUFFALO RD.) AT
KELLIE DR.
NEW SPLICE ENCLOSURE
SPLICE No.2

Notes:
Unused fibers left coiled and stored in splice tray.
Unused Buffer Tubes left coiled and stored in splice tray.

LEGEND
X = FUSION SPLICE
C = CAP IN TRAY
BUFFER TUBE = SPLICE OR EXPRESS AS NOTED

COLOR CODE
TIA/EIA 598–A

(1) BLUE	(7) RED
(2) ORANGE	(8) BLACK
(3) GREEN	(9) YELLOW
(4) BROWN	(10) VIOLET
(5) SLATE	(11) ROSE
(6) WHITE	(12) AQUA

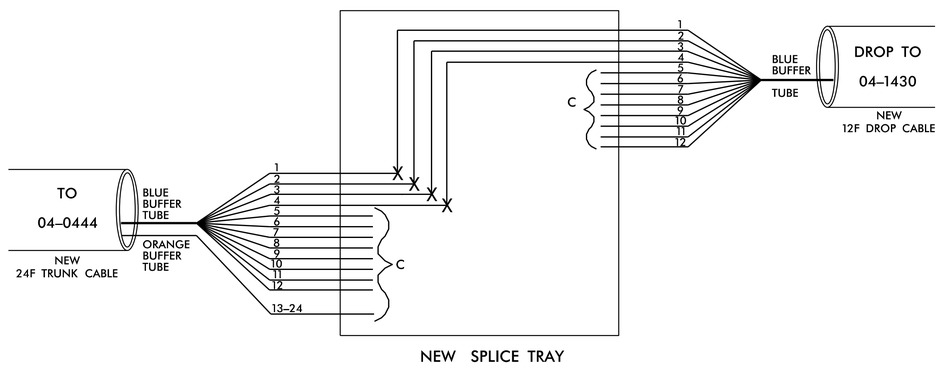

INTERSECTION 04–1430
SR 1003 (BUFFALO RD) AT KELLIE DR.
NEW CONTROLLER/CABINET

Notes:
Unused fibers left coiled and stored in splice tray.
Unused Buffer Tubes left coiled and stored in splice tray.

LEGEND
X = FUSION SPLICE
C = CAP IN TRAY
BUFFER TUBE = SPLICE OR EXPRESS AS NOTED

COLOR CODE
TIA/EIA 598–A

(1) BLUE	(7) RED
(2) ORANGE	(8) BLACK
(3) GREEN	(9) YELLOW
(4) BROWN	(10) VIOLET
(5) SLATE	(11) ROSE
(6) WHITE	(12) AQUA

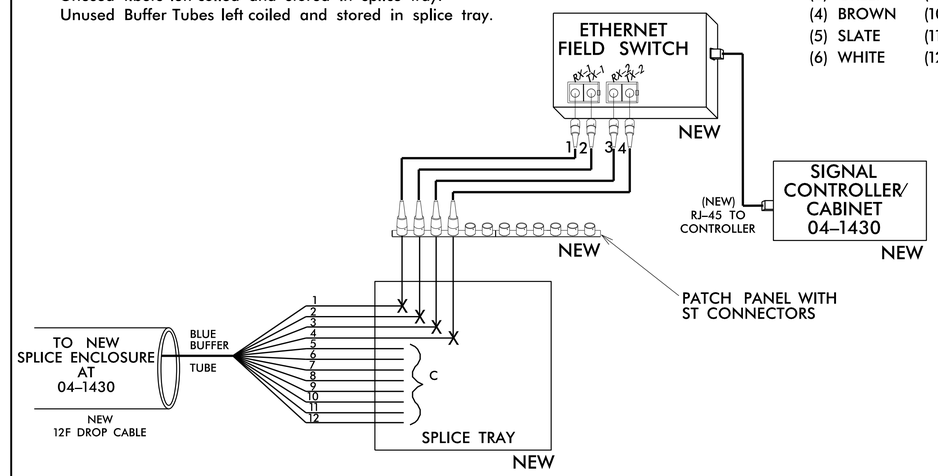

1) FIVE (5) DAYS PRIOR TO BEGINNING WORK ON THE SIGNAL SYSTEM, CONTACT THE DIVISION 4 DEPUTY TRAFFIC ENGINEER, RUSSELL BROADWELL, AT (252)296–3541 TO ARRANGE FOR THE DIVISION TO PROGRAM THE NEW FIELD ETHERNET SWITCHES WITH THE NECESSARY NETWORK CONFIGURATION DATA, INCLUDING BUT NOT LIMITED TO THE FOLLOWING:

   1.) THE PROJECT IP ADDRESS, DEFAULT GATEWAY, SUBNET MASK AND VLAN ID INFORMATION.
   2.) NOTIFY THE DEPUTY TRAFFIC ENGINEER AFTER ALL WORK IS PERFORMED TO ENSURE THAT ALL FIBER CIRCUITS ARE FUNCTIONING PROPERLY.
   3.) WORK IS NOT COMPLETE UNTIL THE SYSTEM IS OPERATIONAL.

2) ETHERNET SWITCH TERMINATION CONFIGURATIONS ARE GENERIC. CONTRACTOR IS RESPONSIBLE FOR DETERMINING AND ENSURING PROPER TERMINATIONS.

3) INCLUDE ON THE COVER OF EACH SPLICE TRAY THE FOLLOWING:

REFERENCE SECTION 1731 "FIBER OPTIC SPLICE ENCLOSURE"
   1.) SPLICE LOCATION
   2.) DATE
   3.) COMPANY NAME
   4.) NAME OF INDIVIDUAL PERFORMING THE SPLICING

PRIOR TO INSTALLING THE COVER ON THE SPLICE TRAY TAKE A DIGITAL PHOTOGRAPH SHOWING THE SPLICE TRAY AND INFORMATION SHOWN ABOVE (1–4) AND SUBMIT PHOTOGRAPH ALONG WITH OTDR TEST RESULTS.

NOTES

1. UNUSED FIBER SHALL BE LEFT COILED AND STORED IN THE SPLICE TRAY.
2. UNUSED BUFFER TUBES SHALL BE LEFT COILED AND STORED IN THE SPLICE TRAY.
3. ETHERNET TERMINATION CONFIGURATIONS ARE GENERIC. THE CONTRACTOR SHALL BE RESPONSIBLE FOR DETERMINING AND ENSURING PROPER TERMINATION.

FINAL

Stantec
Stantec Consulting Services Inc.
801 Jones Franklin Road
Suite 300
Raleigh, NC 27606
Tel. (919) 851-6866

Prepared for the Offices of:
Transportation Mobility and Safety Division
NORTH CAROLINA DEPARTMENT OF TRANSPORTATION
Intermodal Transportation Section
750 N. Greenfield Pkwy., Garner, NC 27529

SCALE
0
N/A

SR 1003 (BUFFALO rOAD) AT
KELLIE DRIVE
FIBER CABLE SPLICING DETAILS
INTERSECTION 04-1430

PLAN DATE:	2017	REVIEWED BY:	D. HARRIS
PREPARED BY:	J. INGRAM	REVIEWED BY:	B. WATSON

REVISIONS	INIT.	DATE

SEAL
NORTH CAROLINA PROFESSIONAL SEAL 29449 ENGINEER BETSY L. WATSON
DocuSigned by: Betsy L. Watson
1/10/2018
SIGNATURE DATE
CADD FILE NAME

DocuSign Envelope ID: BB2E245B-613E-4FFF-904E-00795DDFC54C

09/08/99

TIP PROJECT: U-5999

CONTRACT: DD00240

Project No.	Sheet No.
U-5999	MR-1

STATE OF NORTH CAROLINA
DIVISION OF HIGHWAYS

JOHNSTON COUNTY

DOCUMENT NOT CONSIDERED FINAL UNLESS ALL SIGNATURES COMPLETED

LOCATION: SR 1003 (BUFFALO ROAD) FROM THE INTERSECTION OF SR 1923 (E BOOKER DAIRY ROAD) TO THE INTERSECTION OF KELLIE DRIVE (NEW SIGNAL)

TYPE OF WORK: UTILITY MAKE-READY

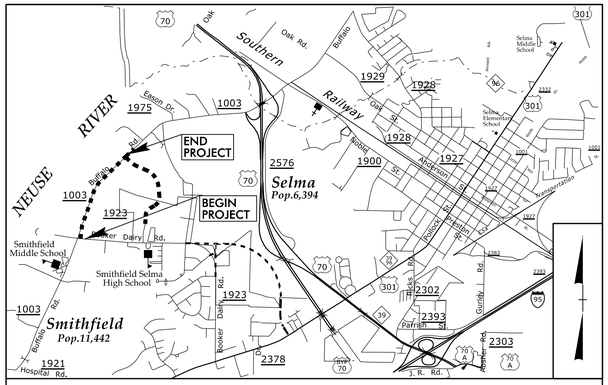

VICINITY MAP

NAD 83/ NSRS 2011

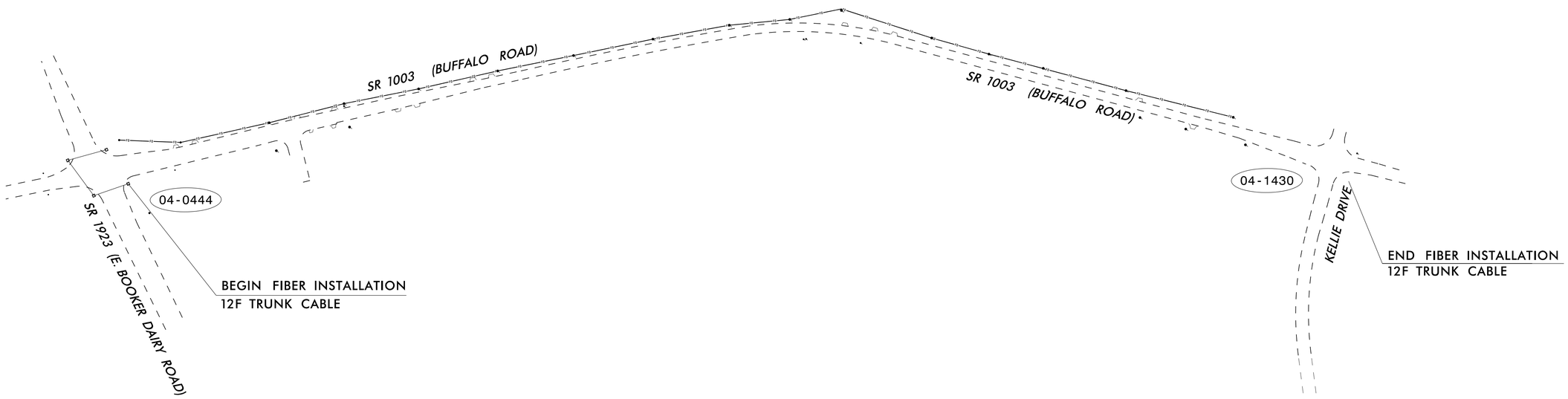

INDEX OF PLANS

SHEET NUMBER	LOCATION / DESCRIPTION
MR-01	TITLE SHEET - MAKE READY
MR-02 and MR-04	TRUNK FIBER INSTALLATION MAKE READY

ROADWAY STANDARD DRAWINGS

THE FOLLOWING ROADWAY STANDARDS AS APPEAR IN "ROADWAY STANDARD DRAWINGS" ROADWAY DESIGN UNIT - N.C. DEPARTMENT OF TRANSPORTATION - RALEIGH, N.C. DATED JANUARY 2012 ARE APPLICABLE TO THIS PROJECT AND BY REFERENCE HEREBY ARE CONSIDERED A PART OF THESE PLANS.

STD. No.	TITLE
1101.01	WORK ZONE WARNING SIGNS
1101.02	TEMPORARY LANE CLOSURE
1101.03	TEMPORARY SHOULDER CLOSURE

LEGEND

XX-XXXX — SIGNAL INVENTORY No.

NCDOT CONTACT:
TRANSPORTATION SAFETY AND MOBILITY
INTELLIGENT TRANSPORTATION SYSTEMS SECTION

I. Neal Avery
Signal Communication Project Engineer

Heidi Berggren, EI
Signal Communication Project Design Engineer

Stantec
Stantec Consulting Services Inc.
801 Jones Franklin Rd-Suite 300
Raleigh, NC 27606
Tel. 919.851.6866
Fax. 919.851.7024
www.stantec.com
License No. F-0672

Betsy L. Watson, PE — Senior Principal
Dean Harris — Senior Transportation Designer
Jim Ingram — Senior ITS Designer

Plans Prepared for:
DIVISION OF HIGHWAYS
750 N. Greenfield Parkway, Garner, NC 27529

DocuSigned by: Betsy L. Watson
35E67BBB34F8...
SEAL 29449
1/10/2018

1/10/2018
U:\TI\001854\transportation\U5999\Traffic\Signals\Design\ITS\U-5999 SCP Cover Sheet-Make Ready.dgn
jingram

DocuSign Envelope ID: BB2E245B-613E-4FFF-904E-00795DDFC54C

PROJECT REFERENCE NO.	SHEET NO.
U-5999	MR-02

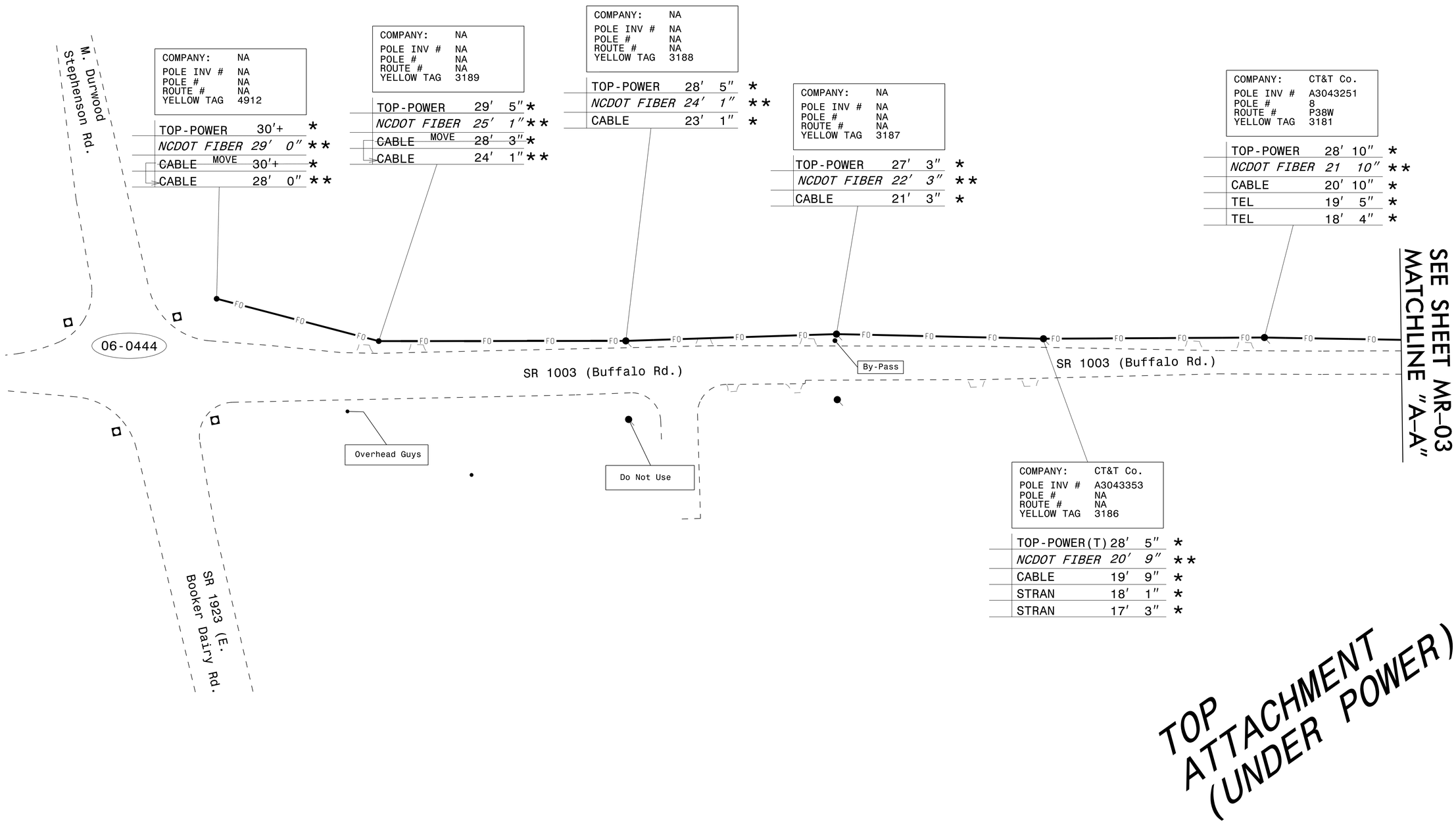

LEGEND:

*	EXISTING ATTACHMENT POINT
**	PROPOSED ATTACHMENT POINT
ITALICS	NEW CABLE

Stantec
Stantec Consulting Services Inc.
801 Jones Franklin Road
Suite 300
Raleigh, NC 27606
Tel. (919) 851-6866
Fax. (919) 851-7024
www.stantec.com
License No. F-0672

Prepared for the Offices of:
STATE OF NORTH CAROLINA DEPARTMENT OF TRANSPORTATION
750 N. Greenfield Pkwy., Garner, NC 27529

(SR 1003) BUFFALO ROAD

(UTILITY POLE ATTACHMENTS)

Division 04 Johnston County Smithfield

PLAN DATE:	2017	REVIEWED BY:	D. HARRIS
PREPARED BY:	J. INGRAM	REVIEWED BY:	B. WATSON

SCALE: NTS

REVISIONS	INIT.	DATE

SEAL
NORTH CAROLINA PROFESSIONAL SEAL 29449 ENGINEER BETSY L. WATSON

DocuSign Envelope ID: 3EE67BD34F2743F...
SIGNATURE

1/10/2018
DATE

CADD FILE NAME

DocuSign Envelope ID: BB2E245B-613E-4FFF-904E-00795DDFC54C

PROJECT REFERENCE NO.	SHEET NO.
U-5999	MR-03

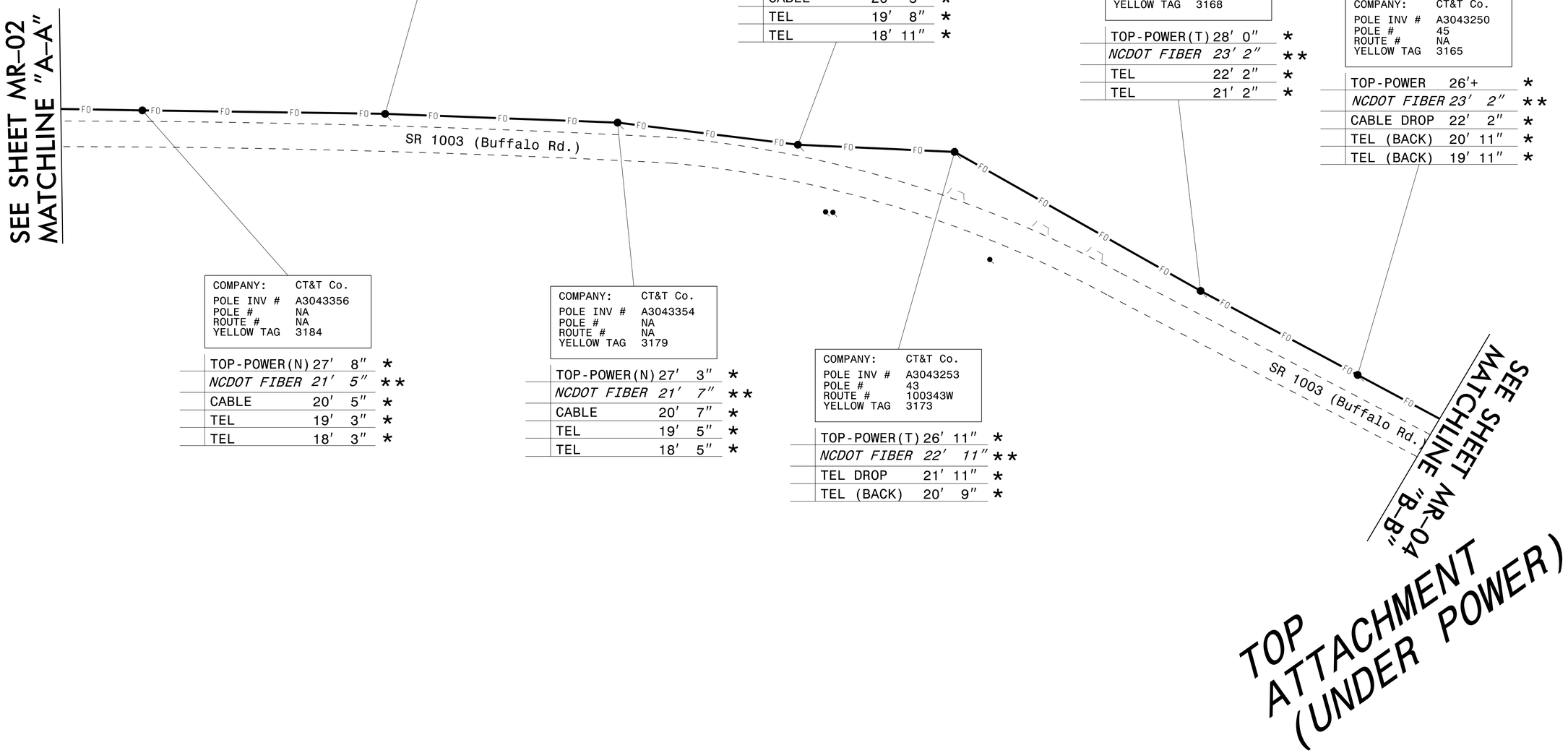

COMPANY: CT&T Co.
POLE INV # A3043355
POLE # NA
ROUTE # NA
YELLOW TAG 3185

TOP-POWER(N)	27′ 3″	*
NCDOT FIBER	*20′ 0″*	**
CABLE	19′ 0″	*
TEL	17′ 10″	*
TEL	16′ 9″	*

COMPANY: CT&T Co.
POLE INV # A3043356
POLE # NA
ROUTE # NA
YELLOW TAG 3184

TOP-POWER(N)	27′ 8″	*
NCDOT FIBER	*21′ 5″*	**
CABLE	20′ 5″	*
TEL	19′ 3″	*
TEL	18′ 3″	*

COMPANY: CT&T Co.
POLE INV # A3043354
POLE # NA
ROUTE # NA
YELLOW TAG 3179

TOP-POWER(N)	27′ 3″	*
NCDOT FIBER	*21′ 7″*	**
CABLE	20′ 7″	*
TEL	19′ 5″	*
TEL	18′ 5″	*

COMPANY: CT&T Co.
POLE INV # A3043252
POLE # NA
ROUTE # NA
YELLOW TAG 3176

TOP-POWER	27′ 5″	*
NCDOT FIBER	*21′ 5″*	**
CABLE	20′ 5″	*
TEL	19′ 8″	*
TEL	18′ 11″	*

COMPANY: CT&T Co.
POLE INV # A3043253
POLE # 43
ROUTE # 100343W
YELLOW TAG 3173

TOP-POWER(T)	26′ 11″	*
NCDOT FIBER	*22′ 11″*	**
TEL DROP	21′ 11″	*
TEL (BACK)	20′ 9″	*

COMPANY: CT&T Co.
POLE INV # A3043254
POLE # P44
ROUTE # NA
YELLOW TAG 3168

TOP-POWER(T)	28′ 0″	*
NCDOT FIBER	*23′ 2″*	**
TEL	22′ 2″	*
TEL	21′ 2″	*

COMPANY: CT&T Co.
POLE INV # A3043250
POLE # 45
ROUTE # NA
YELLOW TAG 3165

TOP-POWER	26′+	*
NCDOT FIBER	*23′ 2″*	**
CABLE DROP	22′ 2″	*
TEL (BACK)	20′ 11″	*
TEL (BACK)	19′ 11″	*

LEGEND:

*	EXISTING ATTACHMENT POINT
**	PROPOSED ATTACHMENT POINT
ITALICS	NEW CABLE

Stantec
Stantec Consulting Services Inc.
801 Jones Franklin Road
Suite 300
Raleigh, NC 27606
Tel. (919) 851-6866
Fax. (919) 851-7024
www.stantec.com
License No. F-0672

Prepared for the Offices of:
750 N. Greenfield Pkwy., Garner, NC 27529

SCALE: NTS

(SR 1003) BUFFALO ROAD

(UTILITY POLE ATTACHMENTS)

Division 04 Johnston County Smithfield

PLAN DATE:	2017	REVIEWED BY:	D. HARRIS
PREPARED BY:	J. INGRAM	REVIEWED BY:	B. WATSON

REVISIONS	INIT.	DATE

SEAL
NORTH CAROLINA PROFESSIONAL SEAL 29449 ENGINEER BETSY L. WATSON

DocuSigned by: Betsy L. Watson
SIGNATURE
1/10/2018
DATE

CADD FILE NAME

DocuSign Envelope ID: BB2E245B-613E-4FFF-904E-00795DDFC54C

PROJECT REFERENCE NO.	SHEET NO.
U-5999	MR-04

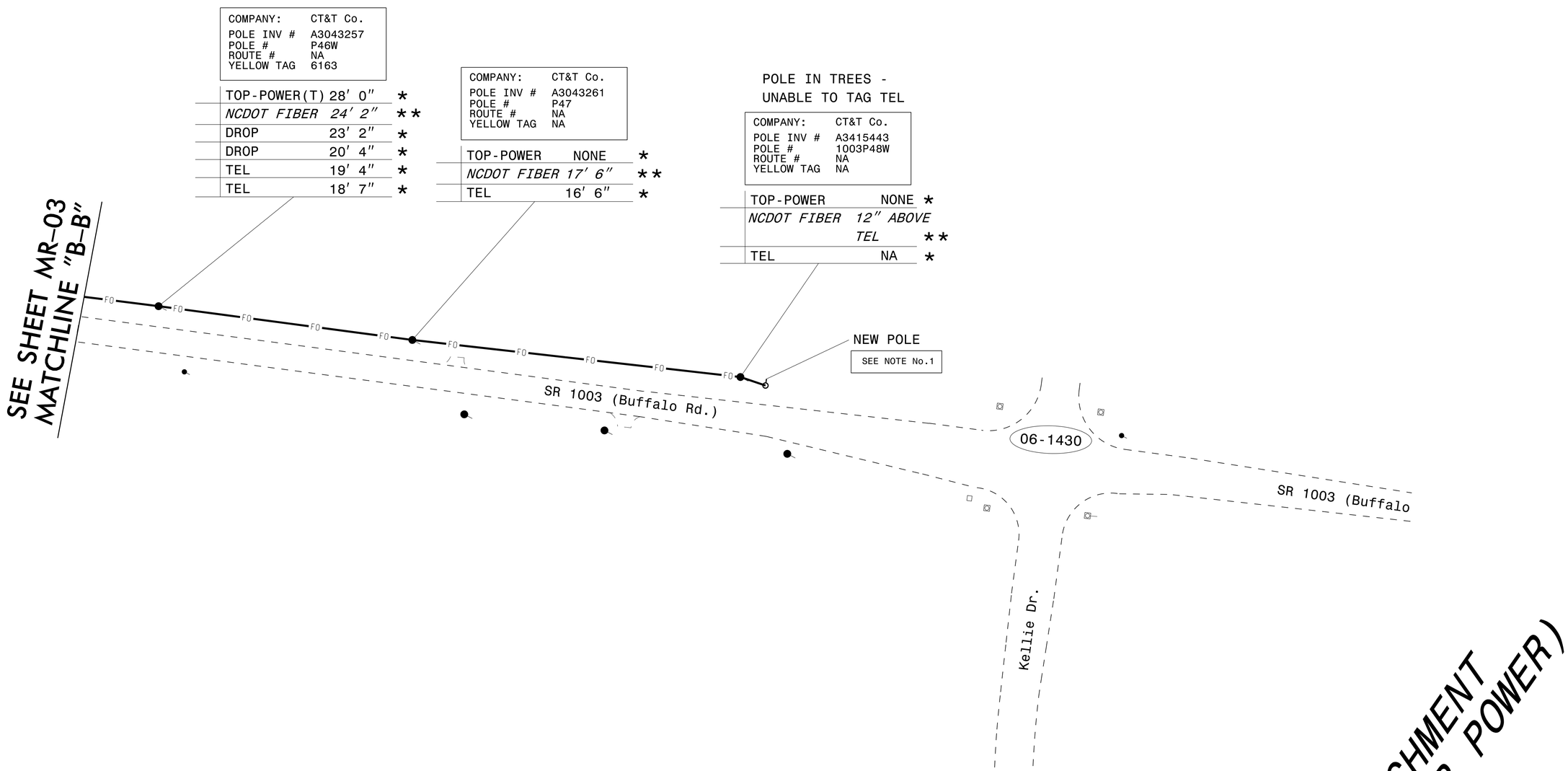

NOTE 1. NEW POWER POLE WILL BE INSTALLED AS PART OF U-5999.
ATTACH NCDOT FIBER OPTIC CABLE A MINIMUM OF 40″ POWER
AND/OR A MINUMUM OF 12″ BELOW NEAREST UTILITY.

LEGEND:

*	EXISTING ATTACHMENT POINT
**	PROPOSED ATTACHMENT POINT
ITALICS	NEW CABLE

Stantec
Stantec Consulting Services Inc.
801 Jones Franklin Road
Suite 300
Raleigh, NC 27606
Tel. (919) 851-6866
Fax. (919) 851-7024
www.stantec.com
License No. F-0672

Prepared for the Offices of:
Transportation Mobility and Safety Division
STATE OF NORTH CAROLINA DEPARTMENT OF TRANSPORTATION
Integrated Transportation Solutions
750 N. Greenfield Pkwy., Garner, NC 27529

SCALE: NTS

(SR 1003) BUFFALO ROAD

(UTILITY POLE ATTACHMENTS)

Division 04 Johnston County Smithfield

PLAN DATE:	2017	REVIEWED BY:	D. HARRIS
PREPARED BY:	J. INGRAM	REVIEWED BY:	B. WATSON

REVISIONS	INIT.	DATE

SEAL
NORTH CAROLINA PROFESSIONAL SEAL 29449 ENGINEER BETSY L. WATSON

DocuSigned by: Betsy L. Watson
SIGNATURE
1/10/2018
DATE

CADD FILE NAME

DocuSign Envelope ID: AF6EBF95-8FAB-44FC-9BEA-23F9C49DEBCA

TIP PROJECT: U-5999

STATE OF NORTH CAROLINA
DIVISION OF HIGHWAYS

T.I.P. NO.	SHEET NO.
U-5999	UC-01

UTILITY CONSTRUCTION PLANS
JOHNSTON COUNTY

LOCATION: SR 1003 (BUFFALO ROAD) AND KELLIE DRIVE
TYPE OF WORK: UTILITY RELOCATES FOR FORCED SANITARY SEWER AND WATER LINE

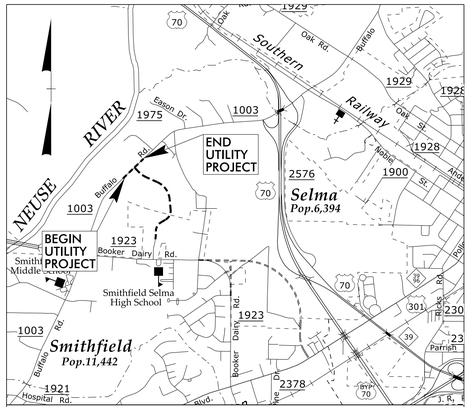

VICINITY MAP

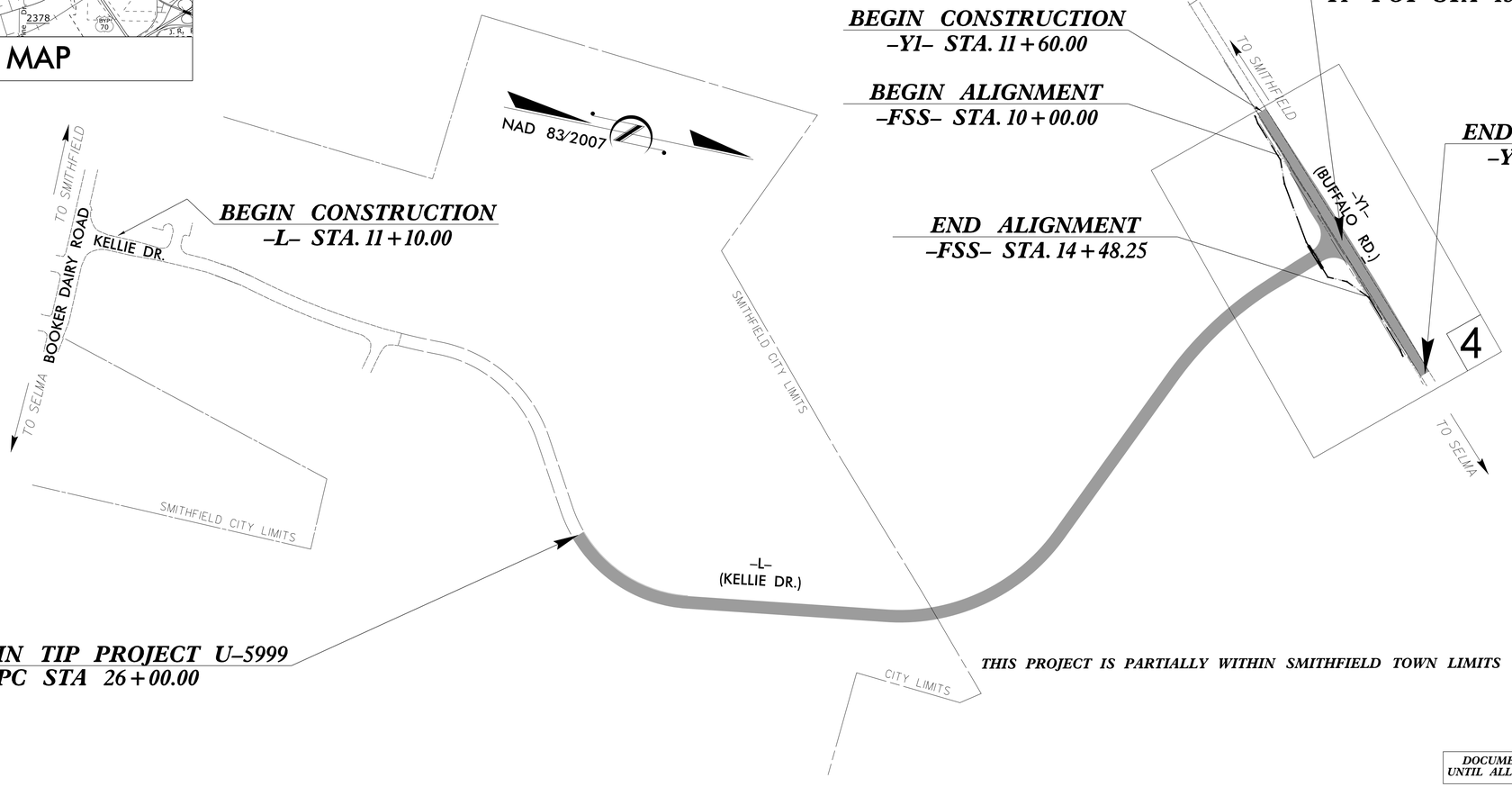

BEGIN CONSTRUCTION
-L- STA. 11+10.00

BEGIN TIP PROJECT U-5999
-L- PC STA 26+00.00

BEGIN CONSTRUCTION
-Y1- STA. 11+60.00

BEGIN ALIGNMENT
-FSS- STA. 10+00.00

END ALIGNMENT
-FSS- STA. 14+48.25

END TIP PROJECT U-5999
-L- POT STA 50+12.51=
-Y1- POT STA 15+48.00

END CONSTRUCTION
-Y1- STA. 19+48.00

THIS PROJECT IS PARTIALLY WITHIN SMITHFIELD TOWN LIMITS

DOCUMENT NOT CONSIDERED FINAL UNTIL ALL SIGNATURES ARE COMPLETED

GRAPHIC SCALES

50 25 0 50 100
PLANS

50 25 0 50 100
PROFILE (HORIZONTAL)

10 5 0 10 20
PROFILE (VERTICAL)

INDEX OF SHEETS

SHEET NO.	DESCRIPTION:
UC-01	TITLE SHEET
UC-02	UTILITY SYMBOLOGY
UC-03	UTILITY CONSTRUCTION NOTES
UC-03A	UTILITY CONSTRUCTION DETAILS
UC-04	UTILITY PLAN AND PROFILE

UTILITY OWNERS:

WATER
TOWN OF SMITHFIELD
350 EAST MARKET STREET
SMITHFIELD, NC 27577

FORCED SANITARY SEWER
JOHNSTON COUNTY
309 EAST MARKET STREET
SMITHFIELD, NC 27577

PREPARED IN THE OFFICE OF

Stantec

STANTEC CONSULTING SERVICES INC.
301 N. MAIN ST., SUITE 2452
WINSTON-SALEM, NC 27101
336-714-7413
LICENSE NO. F-0672

STEVE SMALLWOOD, PE — CONSULTANT CONTACT #1
LINDA PASS, PE — CONSULTANT CONTACT #2
MATT WASHING — CONSULTANT CONTACT #3

SEAL

NORTH CAROLINA PROFESSIONAL SEAL 23500 ENGINEER LINDA L. PASS
1/5/2018

DIVISION OF HIGHWAYS
UTILITIES UNIT
1555 MAIL SERVICES CENTER
RALEIGH NC 27699-1555
PHONE (919) 707-6690
FAX (919) 250-4151

MATT CLARK, PE — DIVISION PROJECT MANAGER
KIM MOORE, PE — DIVISION UTILITY ENGINEER

1/5/2018
U:\7100854\Utilities\proj\U5999_ut_tsh.dgn
rrock

DocuSign Envelope ID: AF6EBF95-8FAB-44FC-9BEA-23F9C49DEBCA

PROJECT REFERENCE NO.	SHEET NO.
U-5999	UC-02

STATE OF NORTH CAROLINA
DIVISION OF HIGHWAYS

UTILITIES PLAN SHEET SYMBOLS

PROPOSED WATER SYMBOLS

Water Line (Sized as Shown) — 18" WL

PROPOSED SEWER SYMBOLS

Force Main Sanitary Sewer Line (Sized as Shown) — 16" FSS

11¼ Degree Bend

22½ Degree Bend

45 Degree Bend

Thrust Collar and Rodding

PROPOSED MISCELLANOUS UTILITIES SYMBOLS

Power Pole

Telephone Pole

Metal Pole

Utility Line by Others (Type as Shown)

Abandon Utility (Sized as Shown) — ABANDON 12" UTILITY PIPE

Plan Note — NOTE

Pay Item Note — PAY ITEM

Encasement by Open Cut — 30" ENCAS BY OC

EXISTING UTILITIES SYMBOLS

Power Pole

Telephone Pole

Joint Use Pole

Utility Pole

Utility Pole with Base

H-Frame Pole

Power Transmission Line Tower

Water Manhole

Power Manhole

Telephone Manhole

Sanitary Sewer Manhole

Hand Hole for Cable

Power Transformer

Telephone Pedestal

CATV Pedestal

Gas Valve

Gas Meter

Located Miscellaneous Utility Object

Abandoned According to Utility Records — AATUR

End of Information — E.O.I.

*Underground Power Line

Aboveground Power

*Underground Telephone Conduit — T

*Underground Fiber Optics Telephone Cable — T FO

*Underground TV Cable — T

*Underground Fiber Optics TV Cable

*Underground Gas Pipeline — G

Aboveground Gas Pipeline — A/G Gas

*Underground Water Line — W

Aboveground Water Line — A/G Water

*Underground Gravity Sanitary Sewer Line — SS

Aboveground Gravity Sanitary Sewer Line — A/G Sanitary Sewer

*Underground SS Forced Main Line — FSS

Underground Unknown Utility Line — ?UTL

SUE Test Hole

Water Meter

Water Valve

Fire Hydrant

Sanitary Sewer Cleanout

*For Existing Utilities

Utility Line Drawn from Record (Type as Shown)

Designated Utility Line (Type as Shown)

REV: 2/1/2012

U:\17100185\K5\208 Utilities\proj\U5999_ut_sym_UC02.dgn
FORM

DocuSign Envelope ID: AF6EBF95-8FAB-44FC-9BEA-23F9C49DEBCA

5/14/99

UTILITY CONSTRUCTION NOTES

GENERAL NOTES:

1. THE PROPOSED UTILITY CONSTRUCTION SHALL MEET THE APPLICABLE REQUIREMENTS OF THE NC DEPARTMENT OF TRANSPORTATION'S "STANDARD SPECIFICATIONS FOR ROADS AND STRUCTURES" DATED JANUARY 2018.

2. THE EXISTING WATER UTILITIES BELONG TO THE TOWN OF SMITHFIELD, NC. THE EXISTING SEWER UTILITIES BELONG TO JOHNSTON COUNTY, NC.

3. ALL WATER LINES ARE TO BE INSTALLED WITHIN COMPLIANCE OF THE RULES AND REGULATIONS OF THE NORTH CAROLINA DEPARTMENT OF ENVIRONMENTAL QUALITY, DIVISION OF WATER RESOURCES, PUBLIC WATER SUPPLY SECTION. ALL SEWER LINES ARE TO BE INSTALLED WITHIN COMPLIANCE OF THE RULES AND REGULATIONS OF THE NORTH CAROLINA DEPARTMENT OF ENVIRONMENTAL QUALITY, DIVISION OF WATER RESOURCES, WATER QUALITY SECTION. PERFORM ALL WORK IN ACCORDANCE WITH THE APPLICABLE PLUMBING CODES.

4. THE UTILITY OWNER OWNS THE EXISTING UTILITY FACILITIES AND WILL OWN THE NEW UTILITY FACILITIES AFTER ACCEPTANCE BY THE NC DEPARTMENT OF TRANSPORTATION ("DEPARTMENT"). THE DEPARTMENT OWNS THE CONSTRUCTION CONTRACT AND HAS ADMINISTRATIVE AUTHORITY.
- COMMUNICATIONS AND DECISIONS BETWEEN THE CONTRACTOR AND UTILITY OWNER ARE NOT BINDING UPON THE DEPARTMENT OR THIS CONTRACT UNLESS AUTHORIZED BY THE ENGINEER.
- AGREEMENTS BETWEEN THE UTILITY OWNER AND CONTRACTOR FOR THE WORK THAT IS NOT PART OF THIS CONTRACT OR IS SECONDARY TO THIS CONTRACT ARE ALLOWED, BUT ARE NOT BINDING UPON THE DEPARTMENT.

5. PROVIDE ACCESS FOR THE DEPARTMENT PERSONNEL AND THE OWNER'S REPRESENTATIVES TO ALL PHASES OF CONSTRUCTION. NOTIFY DEPARTMENT PERSONNEL AND THE UTILITY OWNER TWO WEEKS PRIOR TO COMMENCEMENT OF ANY WORK AND ONE WEEK PRIOR TO SERVICE INTERRUPTION. KEEP UTILITY OWNERS' REPRESENTATIVES INFORMED OF WORK PROGRESS AND PROVIDE OPPORTUNITY FOR INSPECTION OF CONSTRUCTION AND TESTING.

6. THE DRAWINGS DEPICT THE BEST AVAILABLE INFORMATION FOR THE LOCATION, SIZE, AND TYPE OF MATERIAL FOR ALL EXISTING UTILITIES. MAKE INVESTIGATIONS FOR DETERMINING THE EXACT LOCATION, SIZE, AND TYPE MATERIAL OF THE EXISTING FACILITIES AS NECESSARY FOR THE CONSTRUCTION OF THE PROPOSED UTILITIES AND FOR AVOIDING DAMAGE TO EXISTING FACILITIES. REPAIR ANY DAMAGE INCURRED TO EXISTING FACILITIES TO THE ORIGINAL OR BETTER CONDITION AT NO ADDITIONAL COST TO THE DEPARTMENT.

7. MAKE FINAL CONNECTIONS OF THE NEW WORK TO THE EXISTING SYSTEM WHERE INDICATED ON THE DRAWINGS, AS REQUIRED TO FIT THE ACTUAL CONDITIONS, OR AS DIRECTED.

8. MAKE CONNECTIONS BETWEEN EXISTING AND PROPOSED UTILITIES AT TIMES MOST CONVENIENT TO THE PUBLIC, WITHOUT ENDANGERING THE UTILITY SERVICE, AND IN ACCORDANCE WITH THE UTILITY OWNER'S REQUIREMENTS. MAKE CONNECTIONS ON WEEKENDS, AT NIGHT, AND ON HOLIDAYS IF NECESSARY.

9. ALL UTILITY MATERIALS SHALL BE APPROVED PRIOR TO DELIVERY TO THE PROJECT. SEE 1500-7, " SUBMITTALS AND RECORDS" IN SECTION 1500 OF THE STANDARD SPECIFICATIONS.

PROJECT SPECIFIC NOTES:

1. ALL NEW WATER LINE SHALL BE P.V.C. (POLYVINYL CHLORIDE) PIPE UNLESS OTHERWISE INDICATED ON THE DRAWINGS.

2. ALL NEW FORCED SANITARY SEWER SHALL BE C-905 P.V.C. (POLYVINYL CHLORIDE) PIPE UNLESS OTHERWISE INDICATED ON THE DRAWINGS.

3. WATER MAINS OR SEWER LINES CROSSING UNDER STORM DRAIN PIPE SHALL HAVE 24" MINIMUM VERTICAL CLEARANCE UNLESS OTHERWISE SPECIFIED ON THE DRAWINGS.

4. WATER MAINS OR SEWER LINES CROSSING UNDER TRAFFIC SIGNAL CONDUIT SHALL HAVE 24" MINIMUM VERTICAL CLEARANCE UNLESS OTHERWISE SPECIFIED ON THE DRAWINGS.

5. ALL MATERIALS AND CONSTRUCTION PERTAINING TO WATER AND SEWER LINE CONSTRUCTION SHALL BE IN ACCORDANCE WITH THE LATEST STANDARDS AND SPECIFICATIONS OF TOWN OF SMITHFIELD AND JOHNSTON COUNTY, NC, RESPECTIVELY.

6. CONTRACTOR SHALL OBTAIN THE LATEST STANDARDS, SPECIFICATIONS, AND STANDARD DETAIL DRAWINGS OF TOWN OF SMITHFIELD, JOHNSTON COUNTY, NC AND NCDOT.

7. THE CONSTRUCTION OF THE FORCED SANITARY SEWER LINE IS NOT TO BEGIN UNTIL AFTER THE RELOCATION OF EXISTING POWER LINES AND POLES ARE COMPLETE.

STANDARD DETAIL DRAWINGS NOTES:

1. STANDARD DETAILS ARE PROVIDED FOR THE TOWN OF SMITHFIELD AND JOHNSTON COUNTY, NC. TOWN AND COUNTY STANDARD DETAILS ARE TO BE USED WHEN PROVIDED.

2. IF NO STANDARD DETAILS ARE PROVIDED THEN USE NCDOT STANDARD SPECIFICATIONS, DIVISION 15 STANDARD DETAILS FOR UTILITY CONSTRUCTION OR AN APPROVED EQUAL.

Stantec

Stantec Consulting Services Inc.
301 N. Main St.
Suite 2452
Winston-Salem, NC 27101
Tel. (336) 714-7413
Fax. (919) 851-7024
www.stantec.com
LICENSE NO. F-0672

PROJECT REFERENCE NO.	SHEET NO.
U-5999	UC-03

DESIGNED BY:
DRAWN BY:
CHECKED BY:
APPROVED BY:
REVISED:

NORTH CAROLINA DEPARTMENT OF TRANSPORTATION

UTILITIES ENGINEERING SEC.
PHONE:(919)707-6690
FAX:(919)250-4151

NORTH CAROLINA PROFESSIONAL SEAL 23500 ENGINEER LINDA L. PASS
11/5/2018

UTILITY CONSTRUCTION PLANS ONLY

UTILITY CONSTRUCTION

11/5/2018
U:\171201854\Utilities\proj\U5999_ut_notes_UC03.dgn

5/14/99

PROJECT TYPICAL TRENCH DETAILS

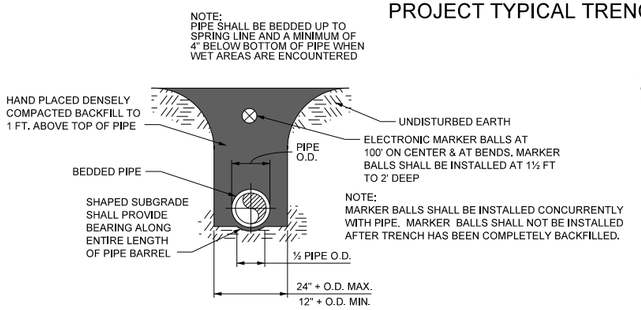

PVC WATER LINE
PIPE LAYING CONDITION

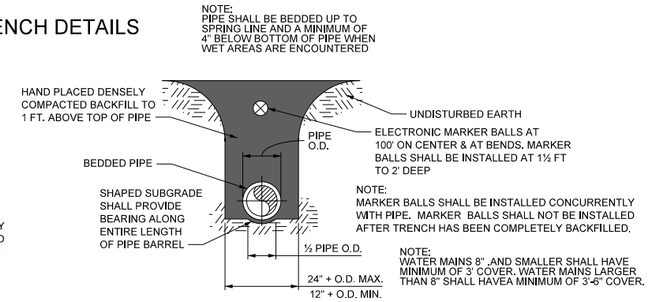

PVC FORCED SANITARY SEWER
PIPE LAYING CONDITION

NOTES:
1. CARRIER PIPE SHALL BE RESTRAINED JOINT WITHIN THE ENCASEMENT
2. ENTIRE SPIDER ASSEMBLY TO BE BITUMINOUS COATED AFTER FABRICATION
3. STEEL ENCASEMENT TO BE INSTALLED IN ACCORDANCE WITH DESIGN PLANS; ALL REVISIONS OR MODIFICATIONS ARE SUBJECT TO APPROVAL.
4. SEE SPECIFICATIONS FOR ENCASEMENT PIPE AND CARRIER PIPE REQUIREMENTS

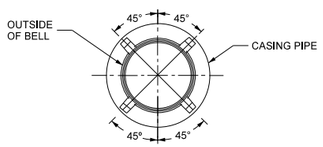

SECTION

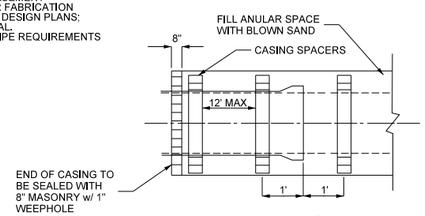

ELEVATION

CASING DETAL

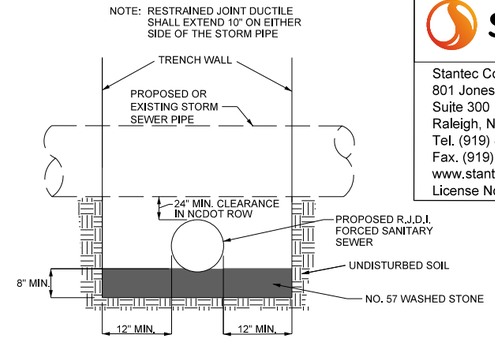

SANITARY SEWER AND STORM
SEWER CROSSING DETAIL

Stantec

Stantec Consulting Services Inc.
801 Jones Franklin Road
Suite 300
Raleigh, NC 27606
Tel. (919) 851-6866
Fax. (919) 851-7024
www.stantec.com
License No. F-0672

PROJECT REFERENCE NO.	SHEET NO.
U-5999	UC-03A

DESIGNED BY:
DRAWN BY:
CHECKED BY:
APPROVED BY:
REVISED:

INCOMPLETE PLANS
DO NOT USE FOR R/W ACQUISITION

NORTH CAROLINA DEPARTMENT OF TRANSPORTATION

UTILITIES ENGINEERING SEC.
PHONE:(919)707-6690
FAX:(919)250-4151

UTILITY CONSTRUCTION PLANS ONLY

UTILITY CONSTRUCTION

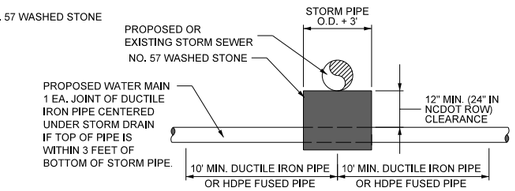

WATER LINE AND STORM
SEWER CROSSING DETAIL

STORM SEWER CROSSING DETAILS

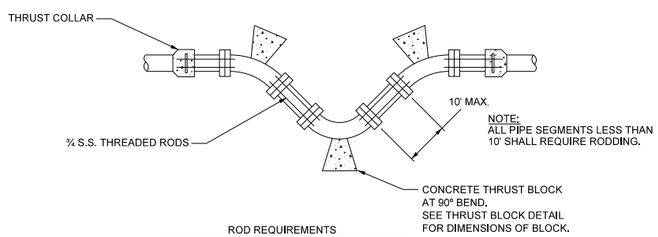

ROD REQUIREMENTS

SIZE OF 45° BEND	STATIC THRUST IN POUNDS	NO. OF RODS RQD.
6"	4,328	2
8"	7,694	2
12"	17,312	4
16"	30,779	6
20"	48,091	8
24"	69,252	10

GENERAL NOTES
1. RODS AND NUTS SHALL BE OF IYPE 304 OR IYPE 316 STAINLESS STEEL.
2. CONCRETE SHALL NOT CONTACT BOLTS OR ENDS OF MECHANICAL JOINT BENDS.

VERTICAL BEND RODDING
AND BLOCKING DETAIL

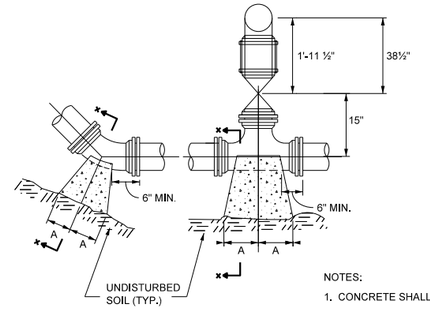

PLAN BENDS
PLAN TEES

NOTES:
1. CONCRETE SHALL BE 3,000 PSI MIN.
2. CONCRETE FORTHRUST BLOCKING SHALL BE KEPT FAIRLY DRY, THUS MAKINGTHE CONCRETE WEDGE SHAPE MORE EASILY FORMED WITH THE WIDEST PART (BLOCKING AREA) AGAINST UNDISTURBED SOIL.
3. NO CONCRETE SHALL COVERANY BOLTS OR GLANDS.
4. ALL FITTINGAND ACCESSORIES TO BE WRAPPED WITH 10 MIL POLYETHYLENE PRIOR TO POURING BLOCKING.
5. VOLUME OF THRUST BLOCKING SHALL BE AS SHOWN ON THE THRUST BLOCKING SCHEDULE.

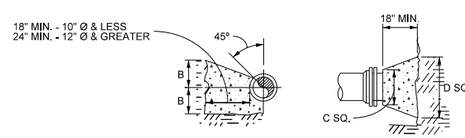

SECTION X-X
BENDS & TEES

PLAN & ELEV.
PLUGS

PIPE SIZE	90° BEND		45° BEND		22½° BEND		11¼° BEND		TEE		PLUG	
	A	B	A	B	A	B	A	B	A	B	A	B
4"	8"	12"	8"	8"	6"	6"	6"	6"	8"	9"	10"	16"
6"	10"	12"	8"	10"	8"	8"	8"	8"	10"	10"	12"	18"
8"	15"	13"	10"	10"	8"	8"	8"	8"	10"	12"	12"	24"
10"	16"	14"	10"	12"	6"	10"	6"	10"	11"	14"	14"	25"
12"	20"	16"	12"	14"	8"	12"	8"	12"	14"	16"	16"	30"
14"	22"	18"	14"	16"	10"	14"	10"	14"	16"	18"	18"	34"
16"	26"	20"	16"	18"	12"	16"	12"	16"	18"	20"	20"	36"
20"	36"	26"	24"	18"	18"	13"	12"	9"	19"	18"	24"	48"
24"	48"	33"	30"	21"	18"	18"	15"	11"	21"	21"	28"	56"

THRUST COLLAR INSTALLATION

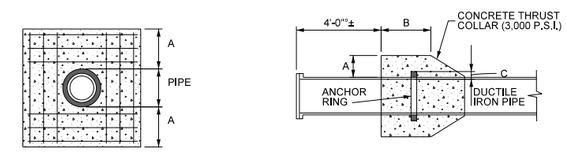

RREINFORCING

NOTE:
6" TO 16" PIPES = 12-NO. 7 BARS
20" TO 36" PIPES= 12-NO. 8 BARS
BARS PLACED AS SHOWN

SECTION

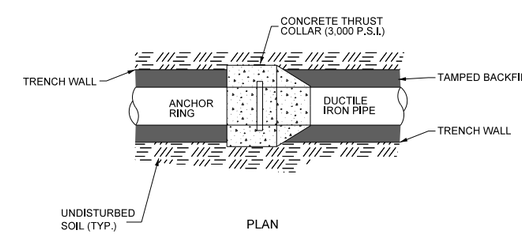

PLAN

SCHEDULE FOR THRUST COLLAR INSTALLATION				
PIPE DIAMETER	CONC. THRUST COLLAR		ANCHOR COLLAR	RINGS REQUIRED
	A	B	C	
6", 8", 12"	1'-0"	1'-0"	2"	ONE
16"	1'-4"	1'-0"	2"	ONE
20"	1'-4"	1'-0"	3"	ONE
24"	1'-4"	1'-0"	3"	TWO
30"	1'-4"	1'-2"	4"	TWO
36"	1'-4"	1'-4"	4"	TWO

THRUST COLLAR INSTALLATION

THRUST BLOCK AND COLLAR DETAILS

SYSTIME$$$$$$$$$$
SYSNAME$$$$$$$$$$
USERNAME$$$$$$$$$$

DocuSign Envelope ID: AF6EBF95-8FAB-44FC-9BEA-23F9C49DEBCA

8/17/99

REVISIONS

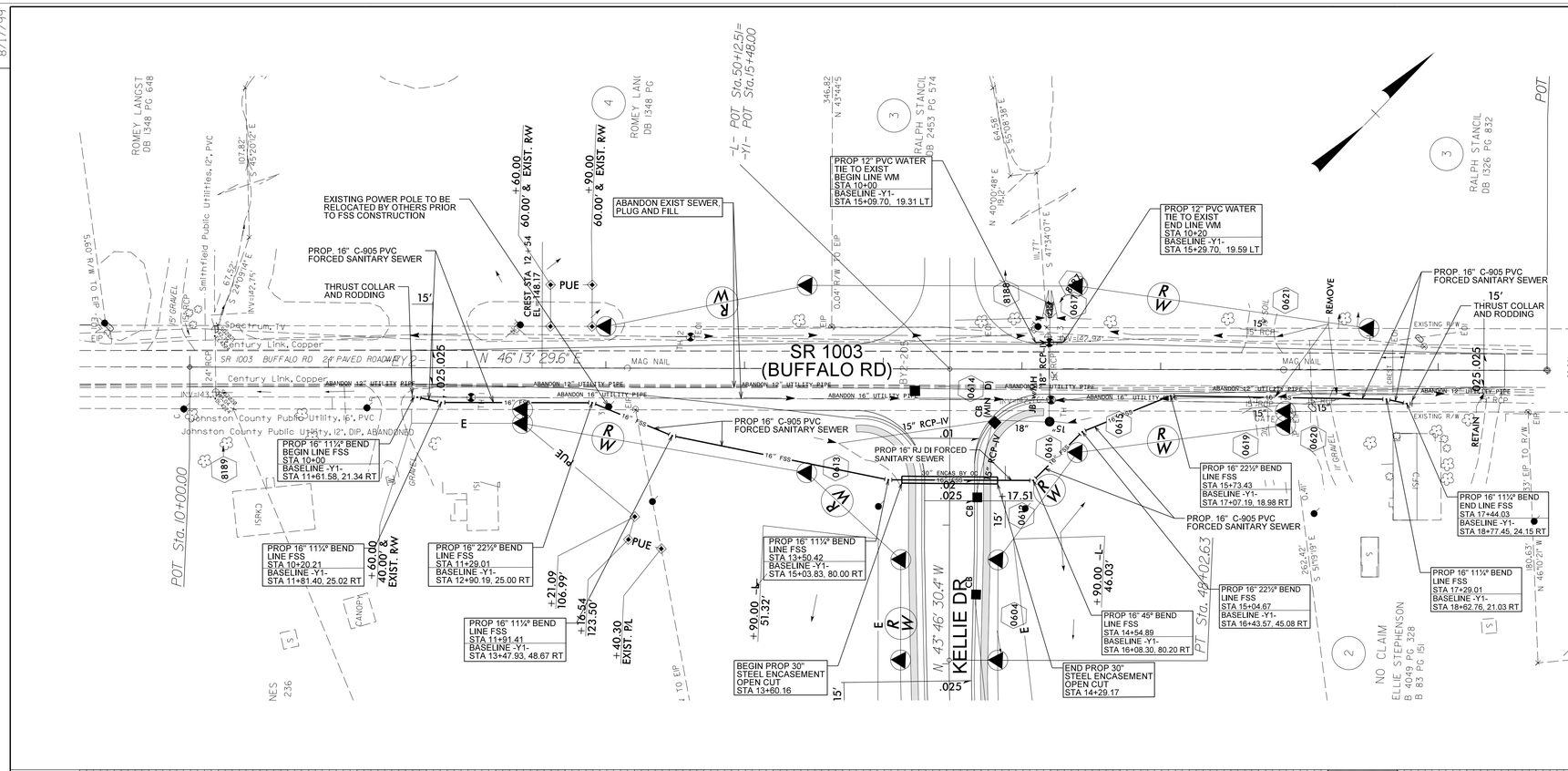

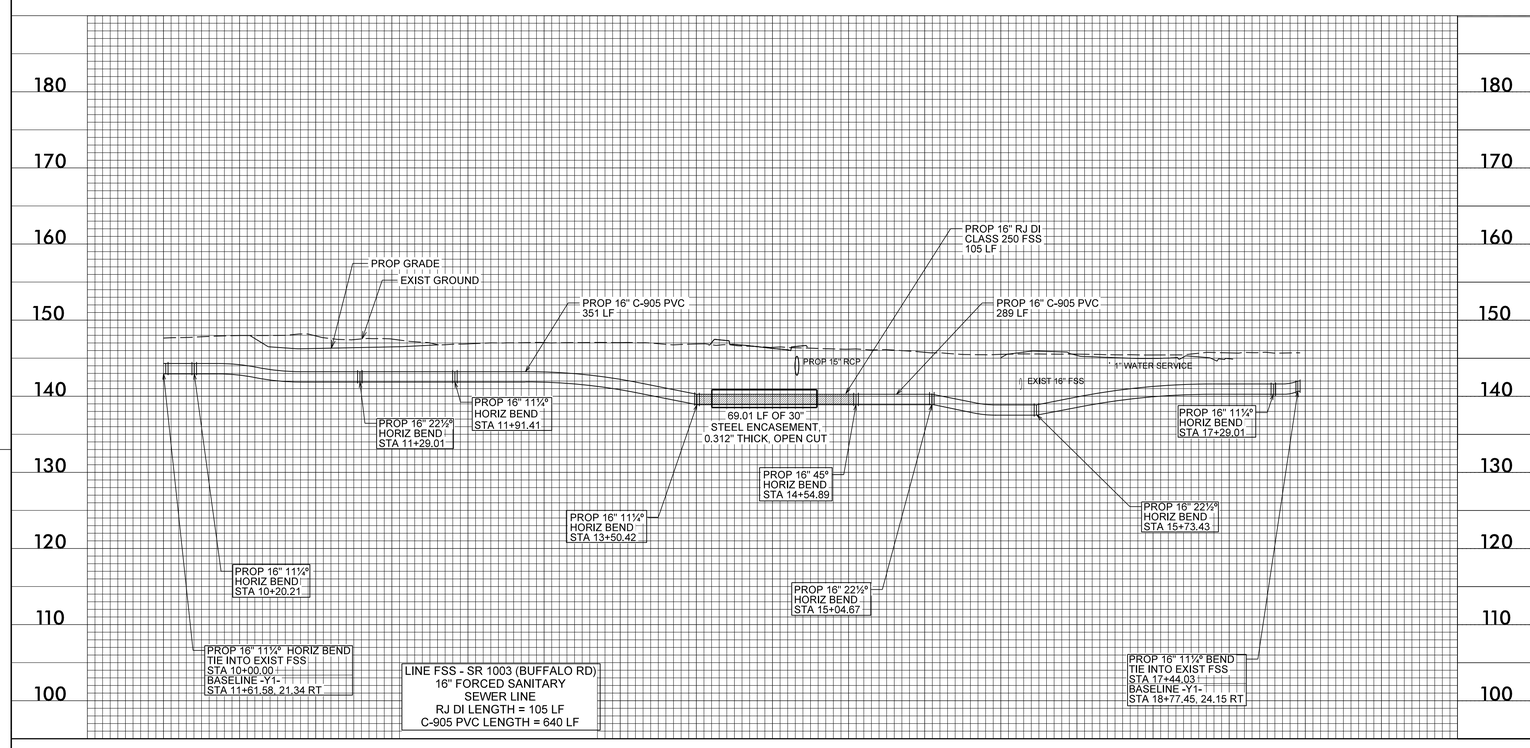

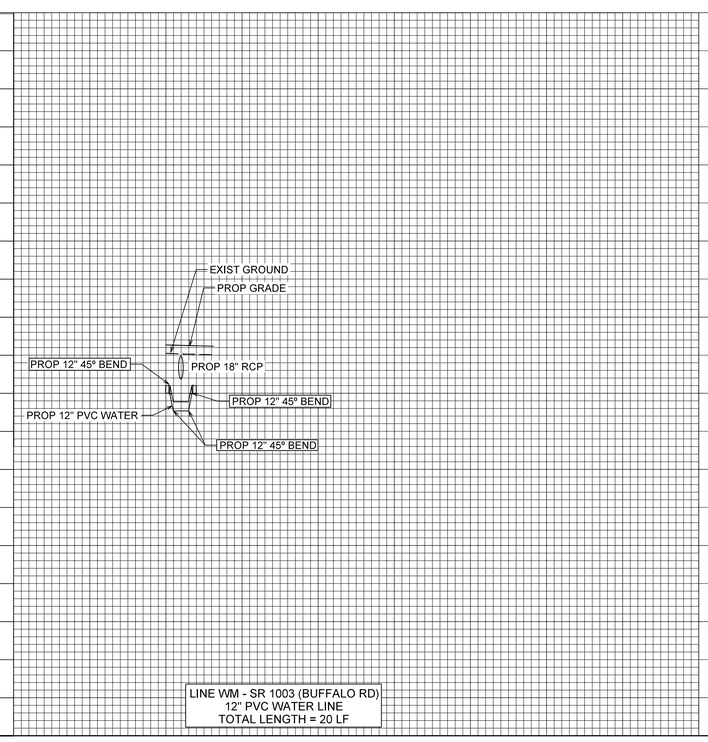

Stantec
Stantec Consulting Services Inc.
301 N Main St.
Suite 2452
Winston-Salem, NC 27101
Tel. (336) 714-7413
Fax. (919) 851-7024
www.stantec.com
License No. F-0672

PROJECT REFERENCE NO.	SHEET NO.
U-5999	UC-04
DESIGNED BY:	
DRAWN BY:	
CHECKED BY:	
APPROVED BY:	
REVISED:	
NORTH CAROLINA DEPARTMENT OF TRANSPORTATION	
UTILITIES ENGINEERING SEC. PHONE:(919)707-6690 FAX:(919)250-4151	UTILITY CONSTRUCTION PLANS ONLY

NORTH CAROLINA PROFESSIONAL SEAL 23500 ENGINEER LINDA L. PAGE
1/5/2018

UTILITY CONSTRUCTION

50 25 0 50 100
HORIZONTAL SCALE
10 5 0 10 20
VERTICAL SCALE

NOTES:

1. MAINTAIN 36" TO 42" MINIMUM COVER BELOW FINISHED GRADE FOR ALL FORCED SANITARY SEWER LINES.
2. PROVIDE 24" MINIMUM VERTICAL CLEARANCE AT ALL THE LOCATIONS WHERE PROPOSED WATER MAIN CROSSES STORM SEWER.
3. PROVIDE 24" MINIMUM VERTICAL CLEARANCE AT ALL THE LOCATIONS WHERE PROPOSED FORCED SANITARY SEWER CROSSES SIGNAL CONDUIT, HANDHOLES, AND STORM SEWER.
4. A 12" DIP, WHICH IS NO LONGER IN USE, RUNS PARALLEL TO THE EXISTING 16" PVC FORCED SANITARY SEWER. THE 12" DIP AND 16" PVC ARE BOTH TO BE ABANDONED.
5. ABANDON FORCED SANITARY SEWER LINE IN LOCATIONS SHOWN. ABANDONMENT INCLUDES ALL FITTINGS AND APPURTENANCES. ABANDONMENT OF THE FORCED SANITARY SEWER LINE IS TO BE IN ACCORDANCE WITH JOHNSTON COUNTY'S REQUIREMENTS.
6. PROVIDE CONCRETE THRUST BLOCKS AT EACH FORCED SANITARY SEWER FITTING AND WATER MAIN FITTING. RESTRAIN JOINT BENDS AS NECESSARY.
7. JOHNSTON COUNTY IS RESPONSIBLE FOR PUMPING ANY WASTE FROM THE FORCED SANITARY SEWER DURING TIE-IN. CONTRACTOR TO PROVIDE 16" x 2" TAPPING SADDLE AND 2" GATE VALVE FOR PUMPING OF WASTE.
8. CONTRACTOR HAS 4 HOURS TO MAKE BOTH FORCED SANITARY SEWER TIE-INS. THE NEW FORCED SANITARY SEWER IS TO BE TESTED AND ACCEPTED PRIOR TO TIE-IN.
9. CONTRACTOR TO CONSTRUCT WITHIN THE RIGHT-OF-WAY.

09/08/99

TIP PROJECT: U-5999

CONTRACT: DD00240

STATE OF NORTH CAROLINA
DIVISION OF HIGHWAYS

JOHNSTON COUNTY

T.I.P. NO.	SHEET NO.
U-5999	UO-1

NOTE:
ALL UTILITY WORK SHOWN ON THIS SHEET IS DONE BY OTHERS.
NO PAYMENT WILL BE MADE TO THE CONTRACTOR FOR UTILITY WORK SHOWN ON THIS SHEET.

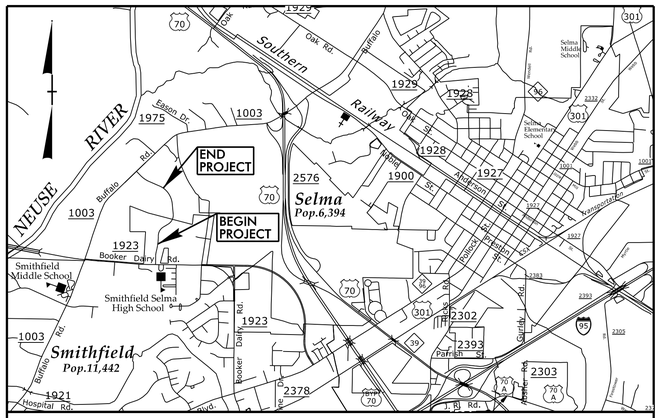

PROJECT REFERENCE NO.	SHEET NO.
U-5999	U0-2

UTILITIES BY OTHERS

THIS SHEET CORRESPONDS TO RDY - 6

NOTE:
ALL UTILITY WORK SHOWN ON THIS SHEET WILL BE DONE BY OTHERS. NO PAYMENT WILL BE MADE TO THE CONTRACTOR FOR UTILITY WORK SHOWN ON THIS SHEET.

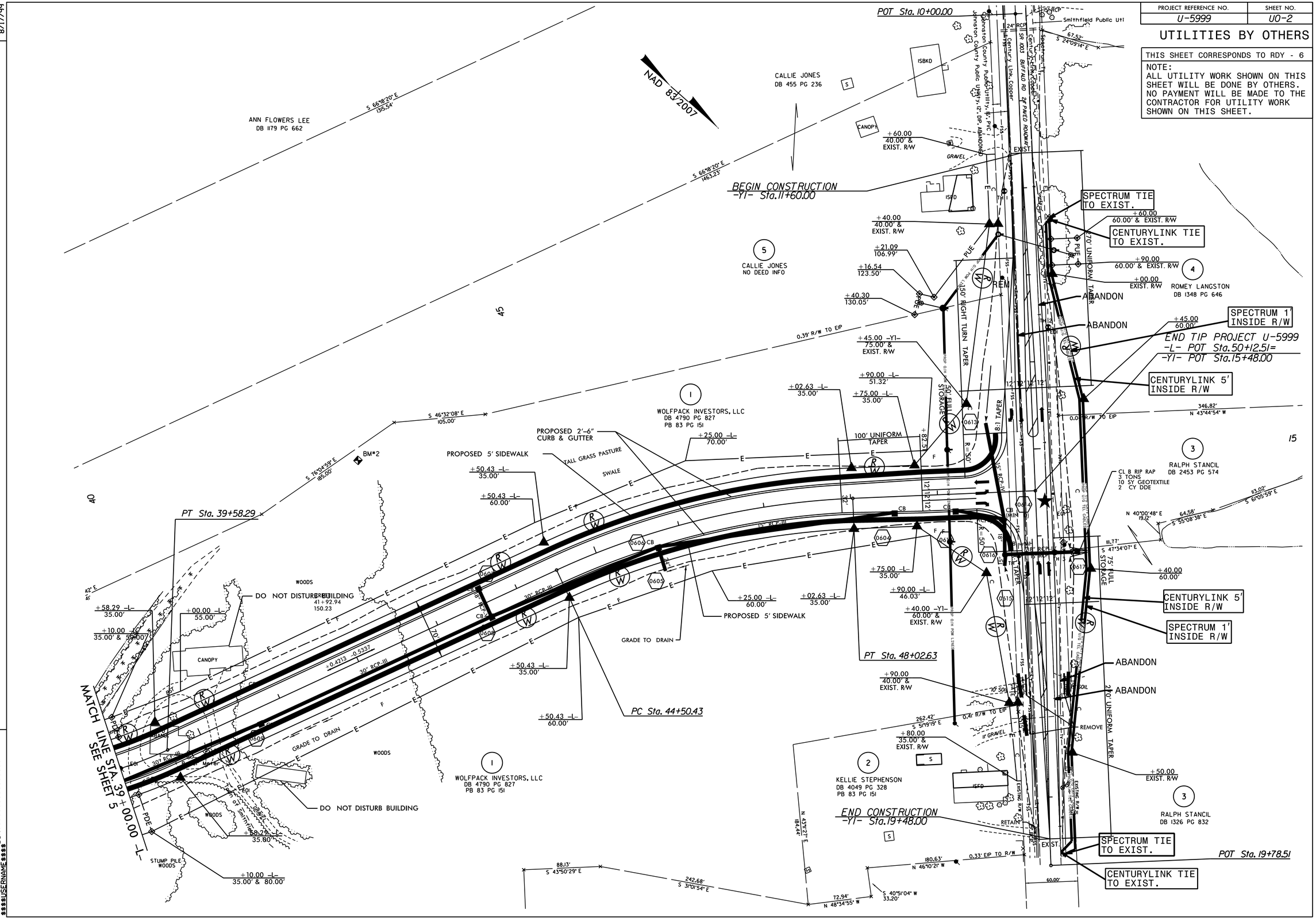

REVISIONS

8/17/99

$$$$$SYSTIME$$$$$
$$$$$DGN$$$$$
$$$$$USERNAME$$$$$

PROJ. REFERENCE NO.	SHEET NO.
U-5999	X-1A

STATE OF NORTH CAROLINA
DIVISION OF HIGHWAYS

NOTE: EMBANKMENT COLUMN DOES NOT INCLUDE BACKFILL FOR UNDERCUT

CROSS-SECTION SUMMARY

Approximate quantities only. Unclassified excavation, fine grading, clearing and grubbing, will be paid for at the lump sum price for "Grading".

Station L	Uncl. Exc. (cu. yd.)	Embt (cu. yd.)	Undercut (cu. yd.)	Station Y1	Uncl. Exc. (cu. yd.)	Embt (cu. yd.)
26+00.00	0	0	0	12+00.00	5	0
26+50.00	0	339	0	12+50.00	23	0
27+00.00	0	305	0	13+00.00	38	0
27+50.00	0	287	0	13+50.00	44	0
28+00.00	0	277	0	14+00.00	64	0
28+50.00	0	275	0	14+50.00	92	0
29+00.00	0	325	0	15+00.00	52	1
29+50.00	0	454	0	15+50.00	4	3
30+00.00	0	500	0	16+00.00	30	8
30+50.00	0	466	0	16+50.00	51	10
31+00.00	0	475	0	17+00.00	37	8
31+50.00	0	492	0	17+50.00	25	6
32+00.00	0	495	0	18+00.00	20	6
32+50.00	3	458	0	18+50.00	17	5
33+00.00	5	433	0	19+00.00	10	2
33+50.00	2	471	0	19+48.00	5	1
34+00.00	0	514	0			
34+50.00	0	524	0			
35+00.00	0	545	0	**Station Y1**	**Uncl. Exc. (cu. yd.)**	**Embt (cu. yd.)**
35+50.00	0	655	0			
36+00.00	0	746	0			
36+50.00	0	762	0	11+60.00	0	0
37+00.00	0	883	0	12+00.00	2	0
37+50.00	0	955	0	12+50.00	5	0
38+00.00	0	932	0	13+00.00	6	0
38+50.00	0	870	0	13+50.00	6	2
39+00.00	0	727	0	14+00.00	4	8
39+50.00	0	665	0	14+50.00	4	13
40+00.00	0	648	0	15+00.00	5	21
40+50.00	0	606	0	15+50.00	6	30
41+00.00	0	569	0	16+00.00	11	36
41+50.00	0	543	0	16+50.00	11	40
42+00.00	0	510	0	17+00.00	7	39
42+50.00	0	495	0	17+50.00	6	24
43+00.00	0	499	0	18+00.00	7	10
43+50.00	0	515	0	18+50.00	6	3
44+00.00	0	551	0	19+00.00	5	1
44+50.00	0	582	0	19+48.00	4	0
45+00.00	0	634	0			
45+50.00	0	678	0			
46+00.00	0	658	0			
46+50.00	0	599	0			
47+00.00	0	511	11			
47+50.00	0	380	58			
48+00.00	0	222	136			
48+50.00	17	90	209			
49+00.00	55	26	243			
49+50.00	71	16	257			
49+82.51	71	16	173			

6/23/16

0 2.5 5	PROJ. REFERENCE NO.	SHEET NO.
	U-5999	X-1

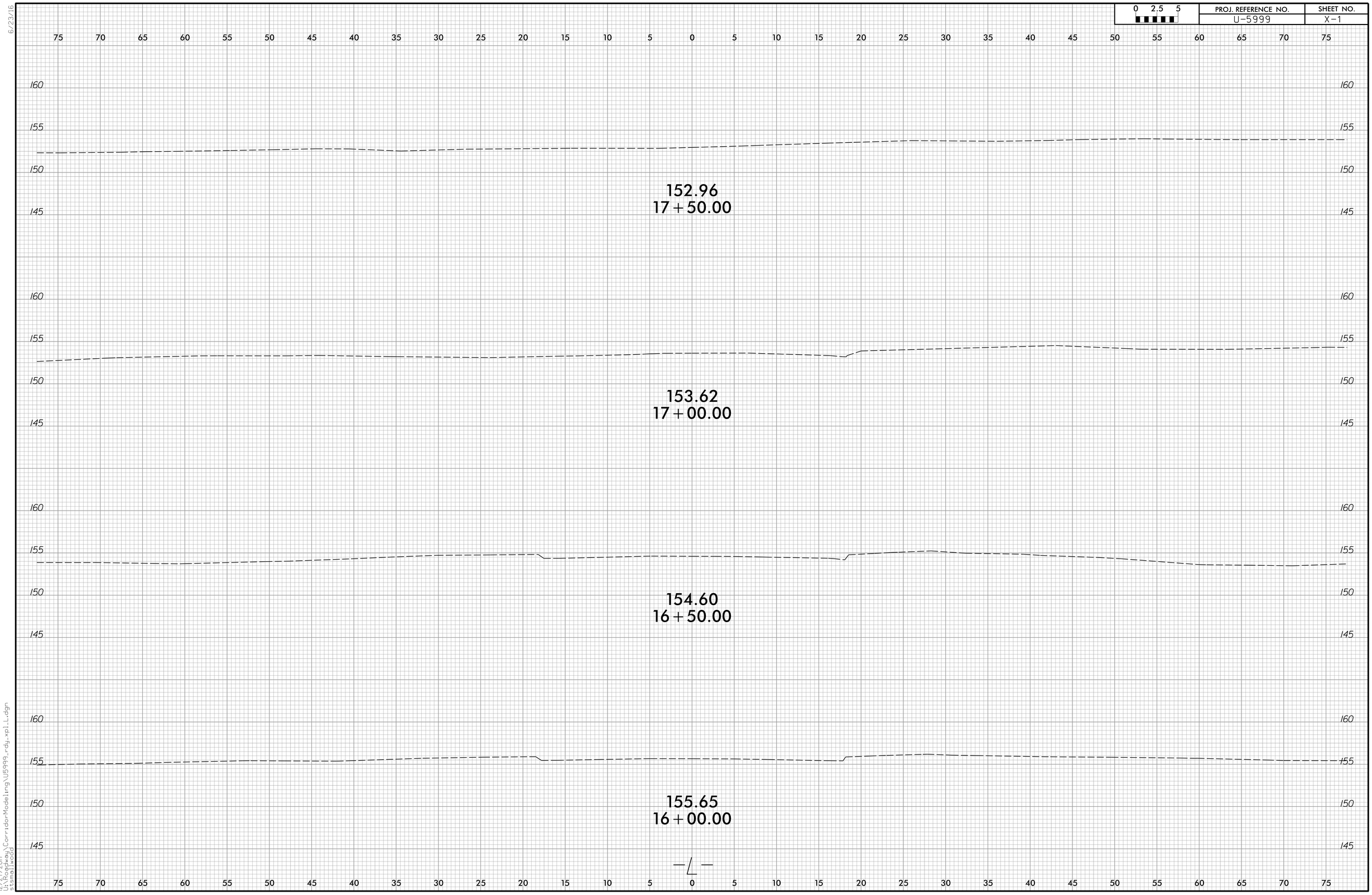

12/27/2017
U-5999_Corridor Modeling\U5999_rdy_xpl_L.dgn
stsamiwood

0 2.5 5	PROJ. REFERENCE NO.	SHEET NO.
	U-5999	X-2

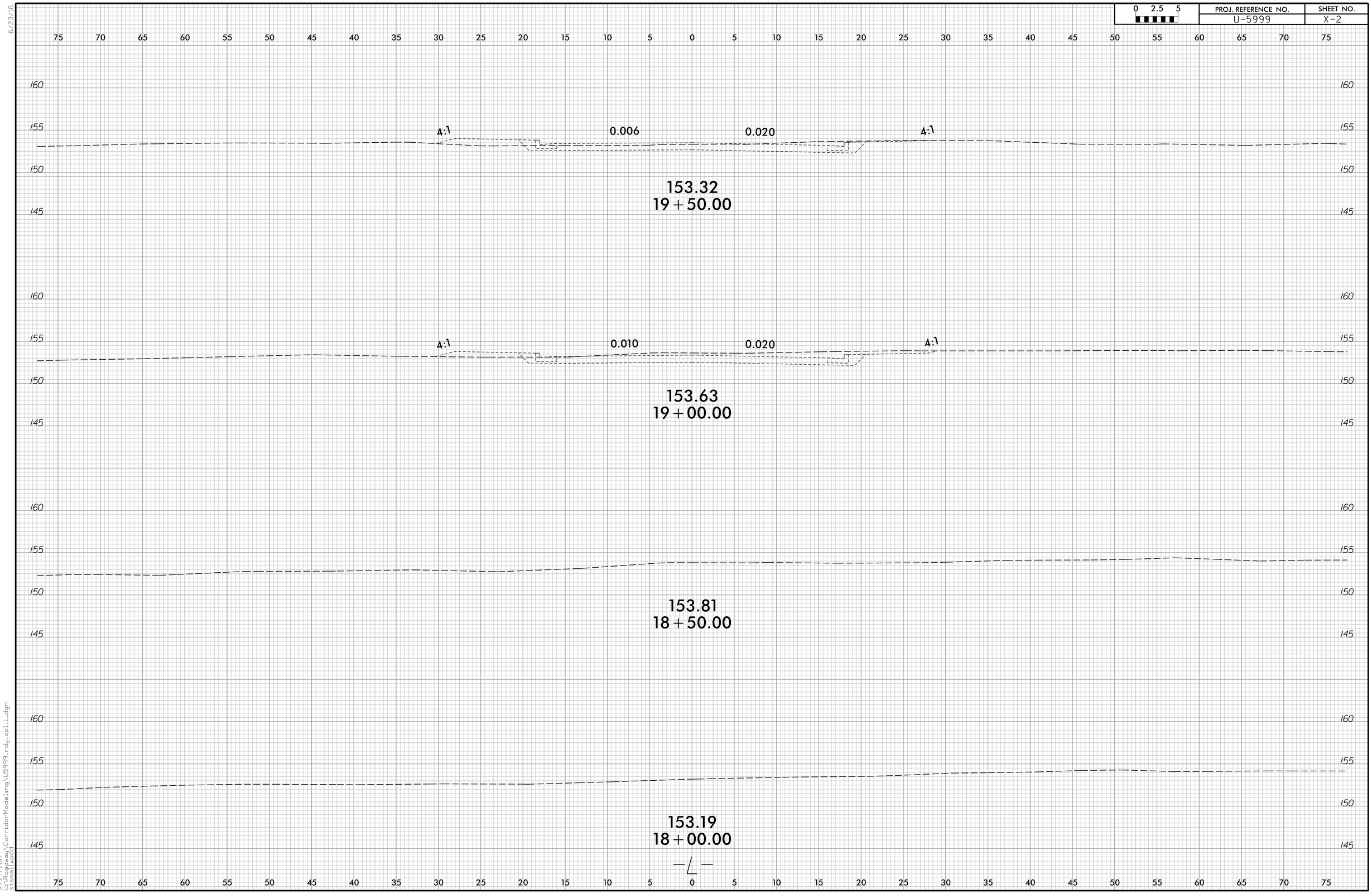

6/23/16

12/27/2017
U:\Projects\Highway\CorridorModeling\U5999_rdy_xpl_L.dgn
stsamlinwood

0 2.5 5	PROJ. REFERENCE NO.	SHEET NO.
	U-5999	X-3

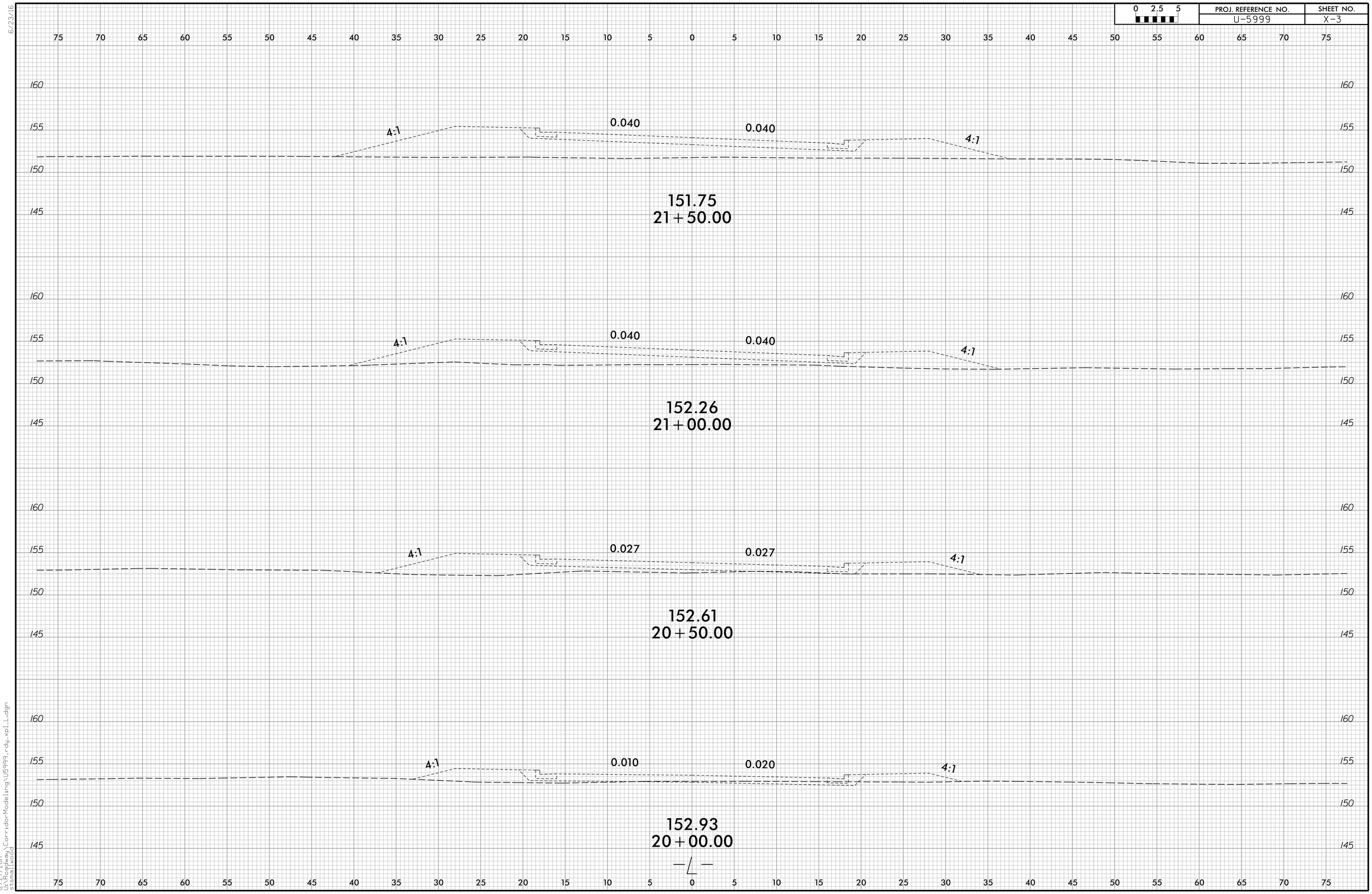

6/23/16

12/27/2017
U:\Projects\Highway\CorridorModeling\U5999_rdy_xpl_L.dgn
stsmallwood

0 2.5 5	PROJ. REFERENCE NO.	SHEET NO.
	U-5999	X-4

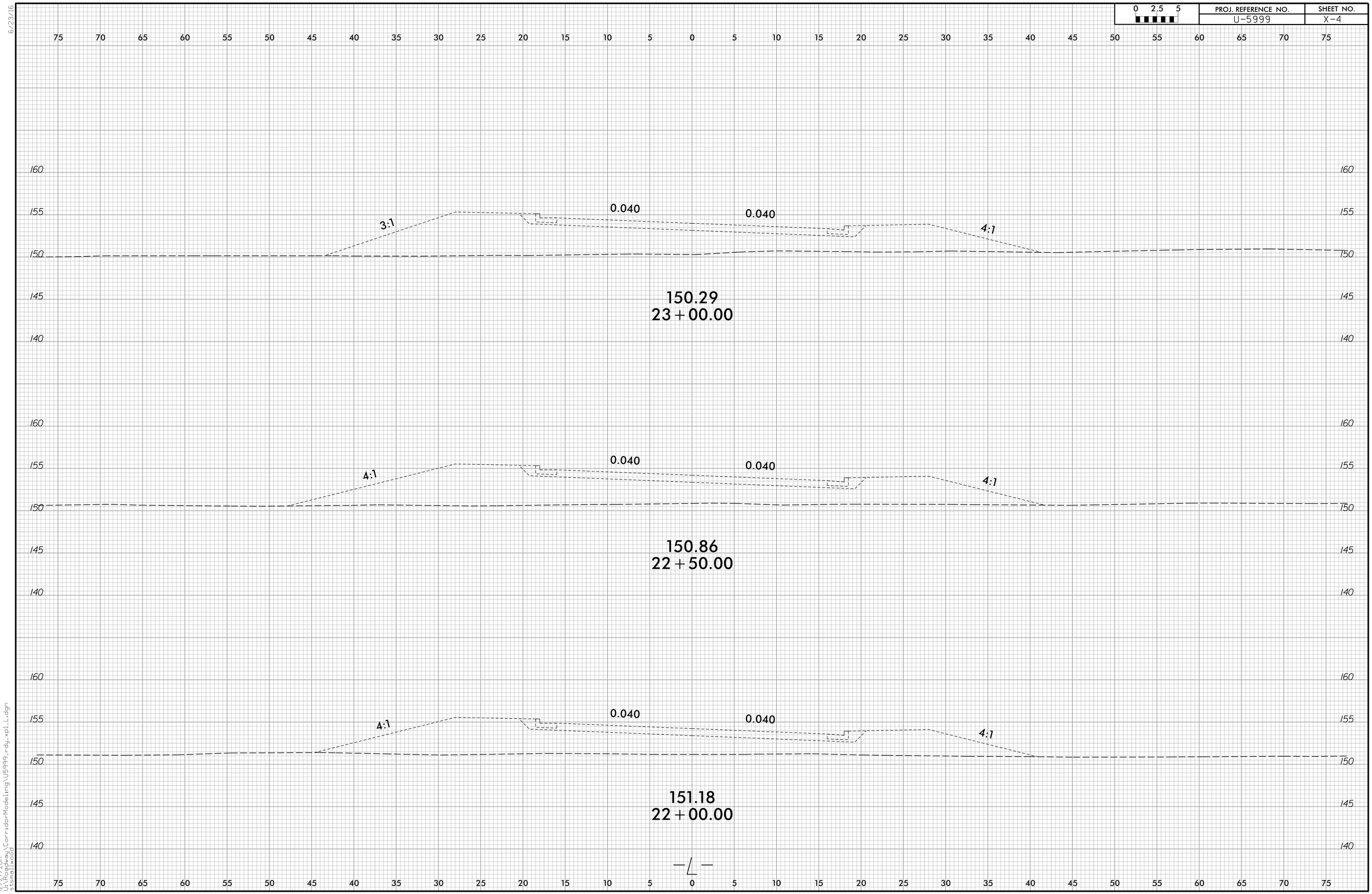

6/23/16

12/27/2017
U:\Projects\Highway\CorridorModeling\U5999_rdy_xpl_L.dgn
stsamlawood

0 2.5 5	PROJ. REFERENCE NO.	SHEET NO.
	U-5999	X-5

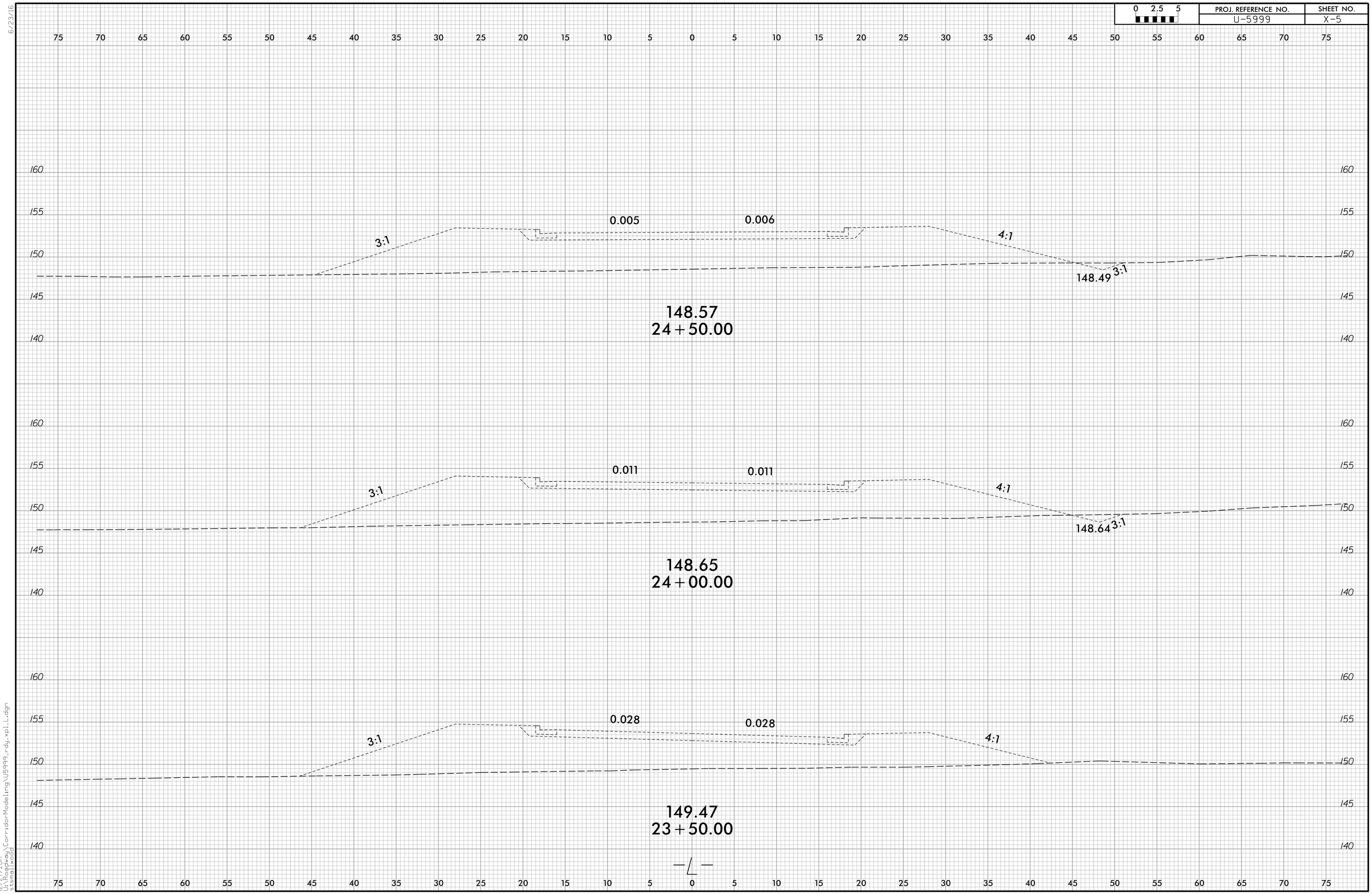

6/23/16

12/27/2017
U:\Projects\Corridor Modeling\U5999_rdy_xpl_L.dgn
stsmallwood

0 2.5 5	PROJ. REFERENCE NO.	SHEET NO.
	U-5999	X-6

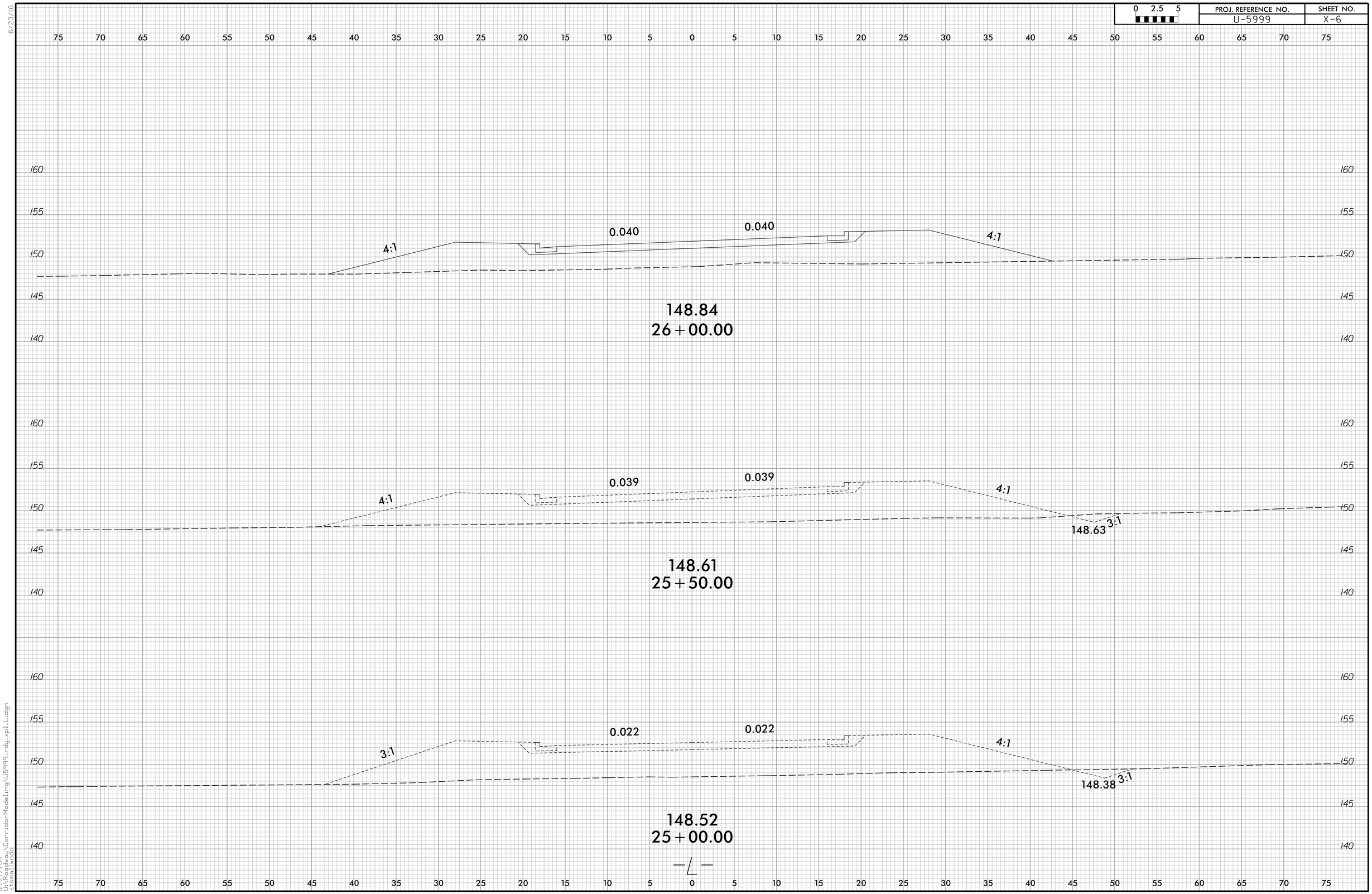

6/23/16

12/27/2017
U:\Projects\CorridorModeling\U5999_rdy_xpl_L.dgn
stsmallwood

0 2.5 5	PROJ. REFERENCE NO.	SHEET NO.
	U-5999	X-7

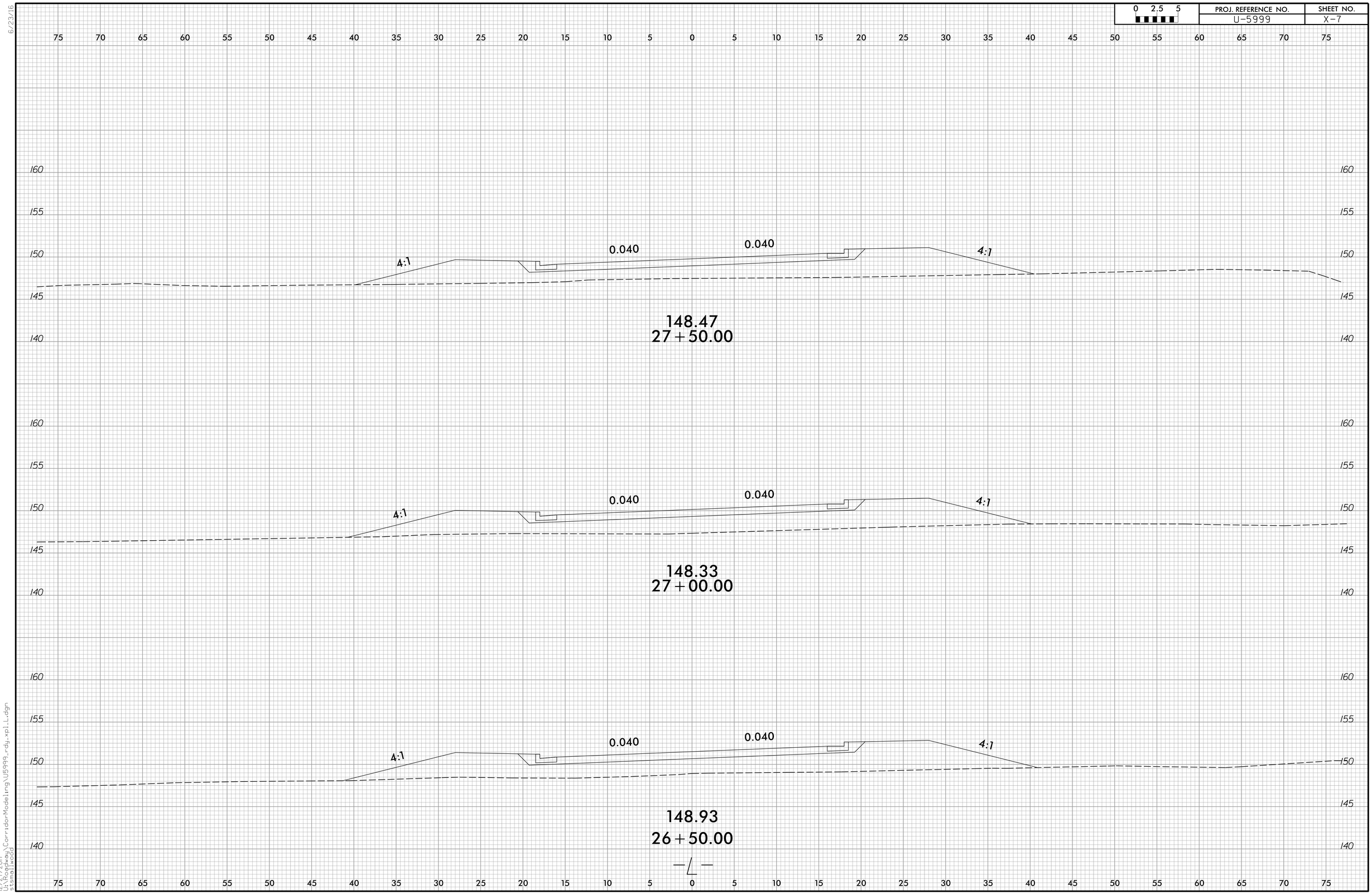

6/23/16

12/27/2017
U-5999_Hickory\CorridorModeling\U5999_rdy_xpl_L.dgn
stsamiwood

0 2.5 5	PROJ. REFERENCE NO.	SHEET NO.
	U-5999	X-8

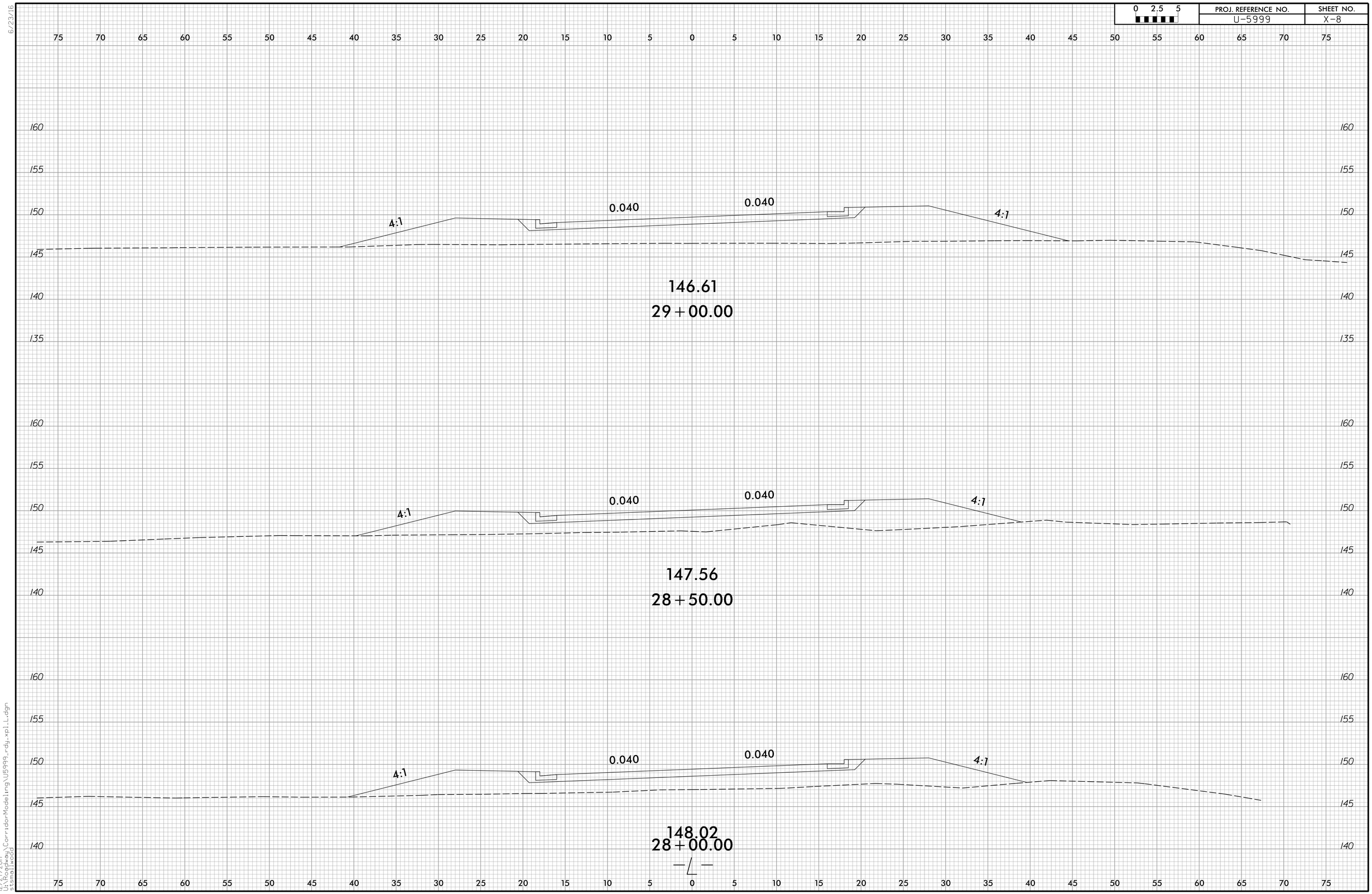

6/23/16

12/27/2017
U:\Projects\Corridor Modeling\U5999_rdy_xpl_L.dgn
stsmallwood

0 2.5 5	PROJ. REFERENCE NO.	SHEET NO.
	U-5999	X-9

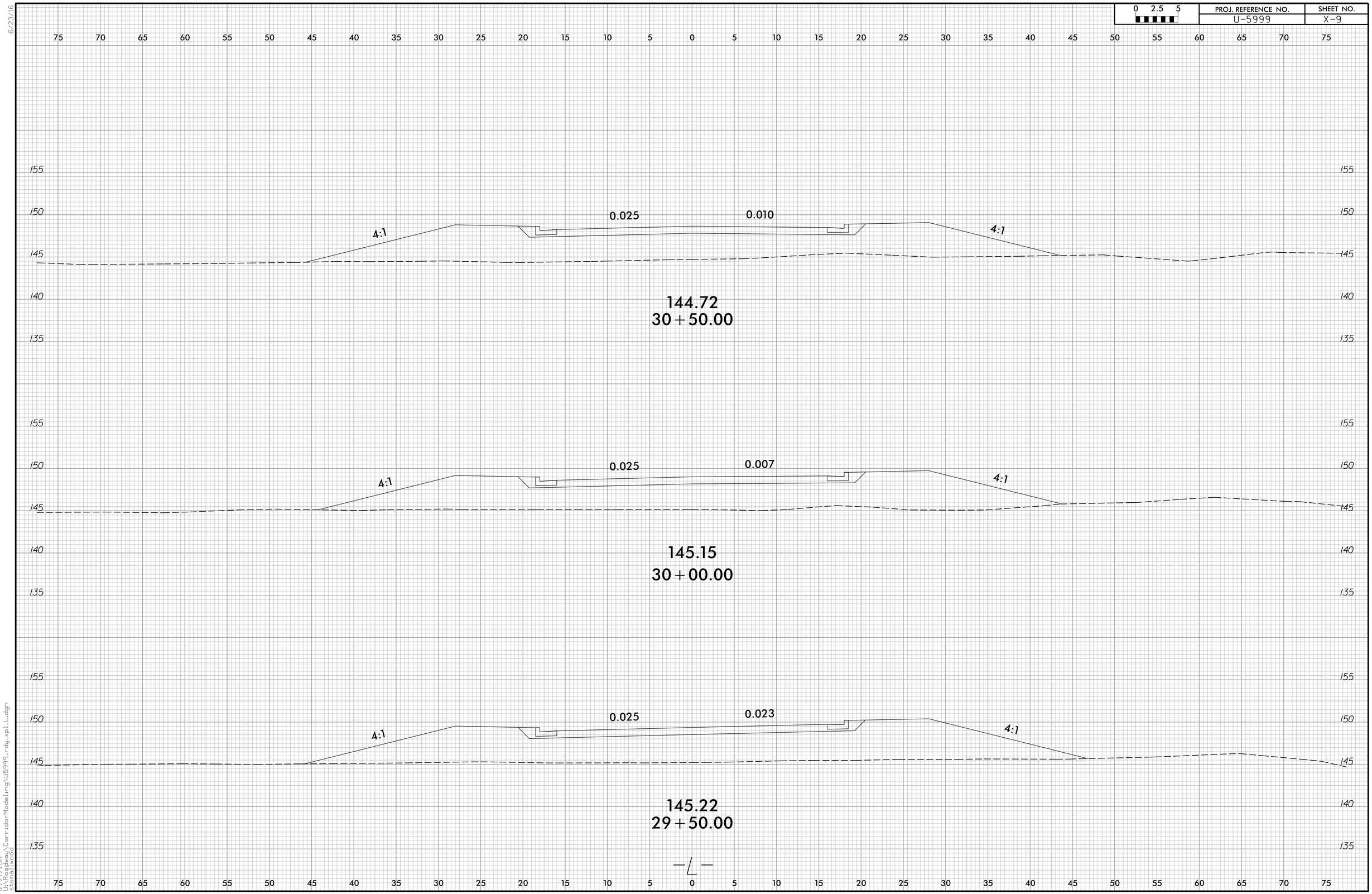

6/23/16
12/27/2017
U:\Projects\CorridorModeling\U5999_rdy_xpl_L.dgn
stsamiwood

0 2.5 5	PROJ. REFERENCE NO.	SHEET NO.
	U-5999	X-10

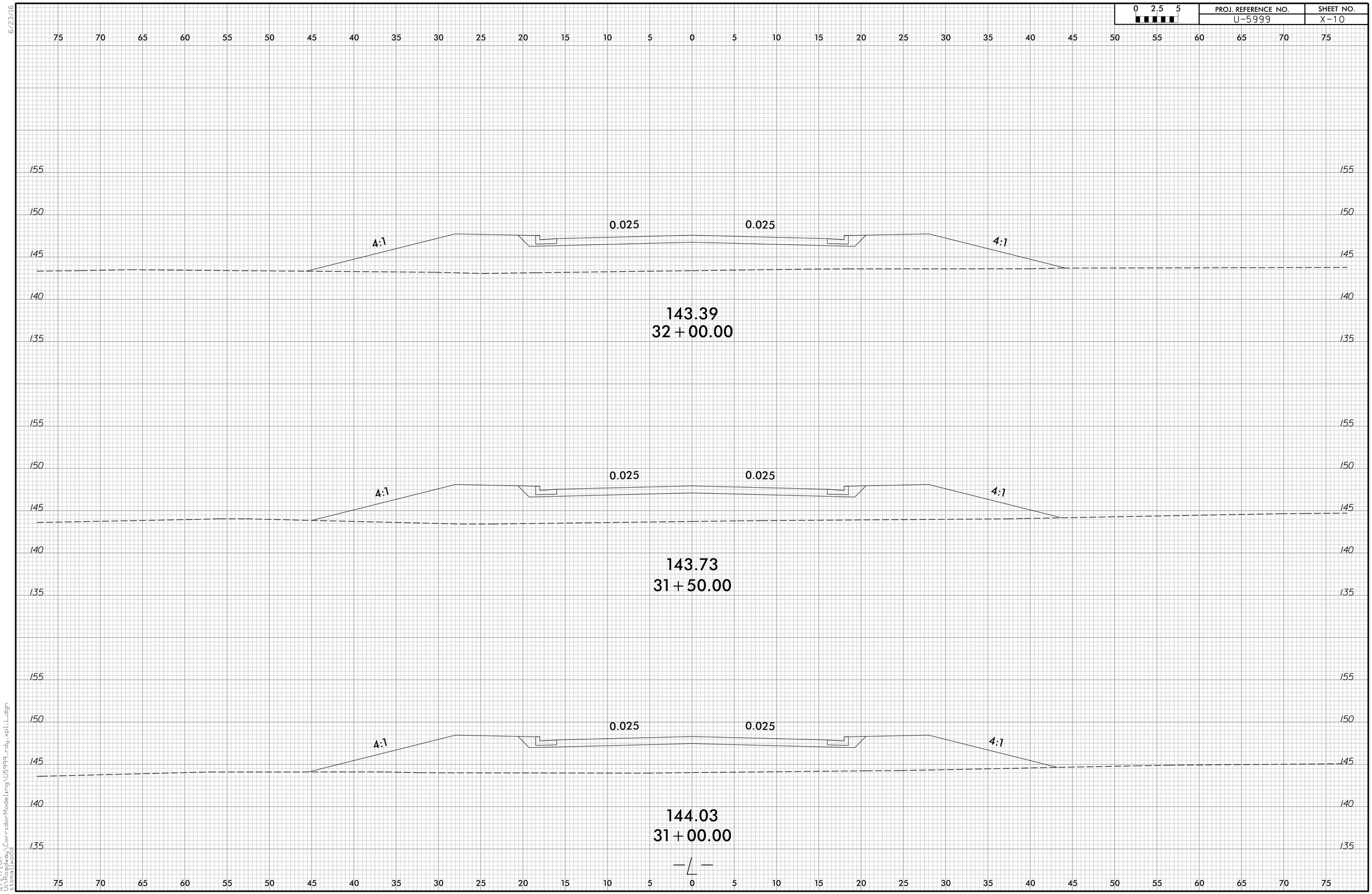

6/23/16
12/27/2017
U:\Projects\Highway\CorridorModeling\U5999_rdy_xpl_L.dgn
stsamiwood

0 2.5 5	PROJ. REFERENCE NO.	SHEET NO.
	U-5999	X-11

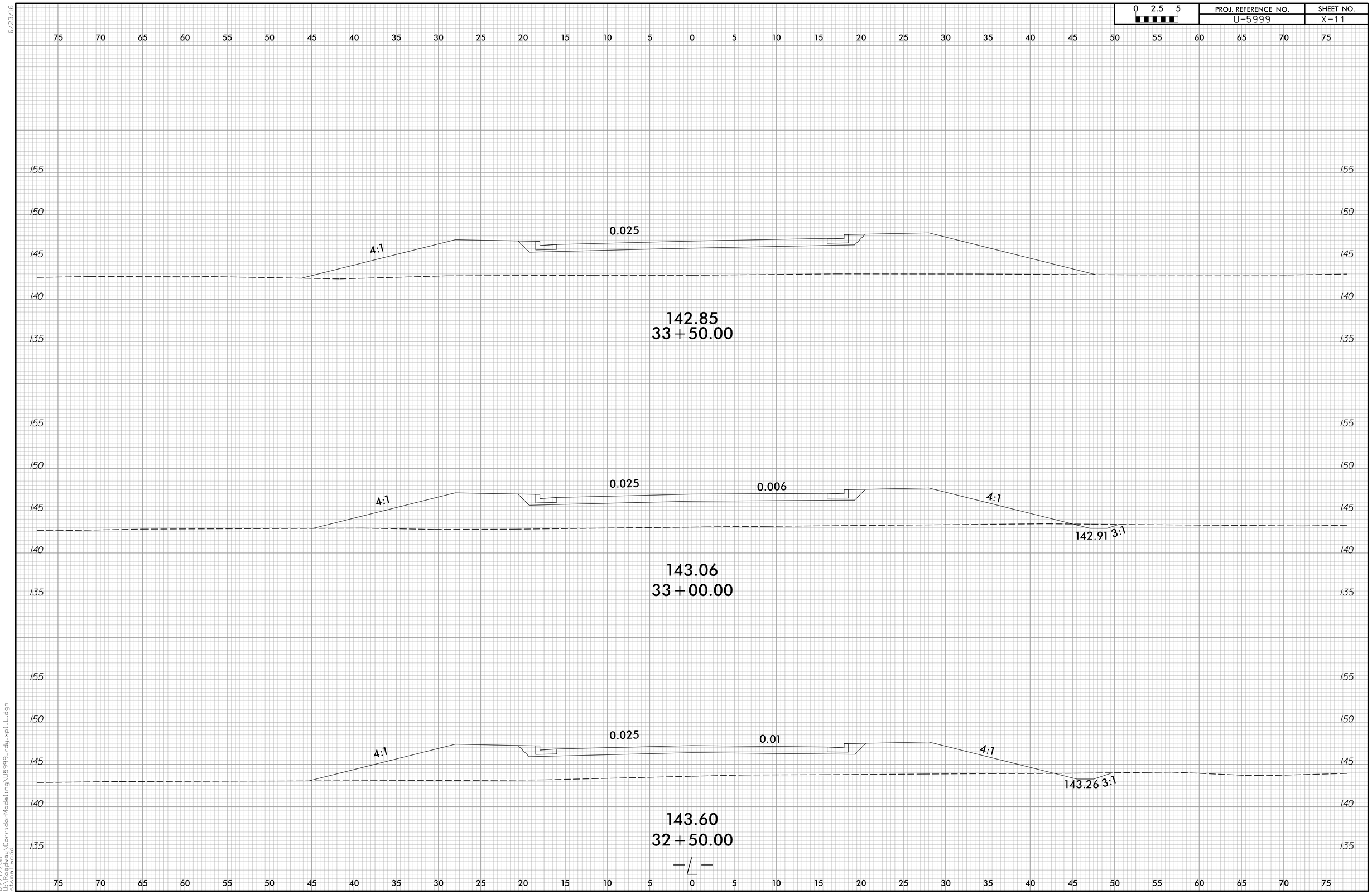

6/23/16
12/27/2017
U-5999_Hwy\CorridorModeling\U5999_rdy_xpl_L.dgn
stsamlawood

0 2.5 5	PROJ. REFERENCE NO.	SHEET NO.
	U-5999	X-12

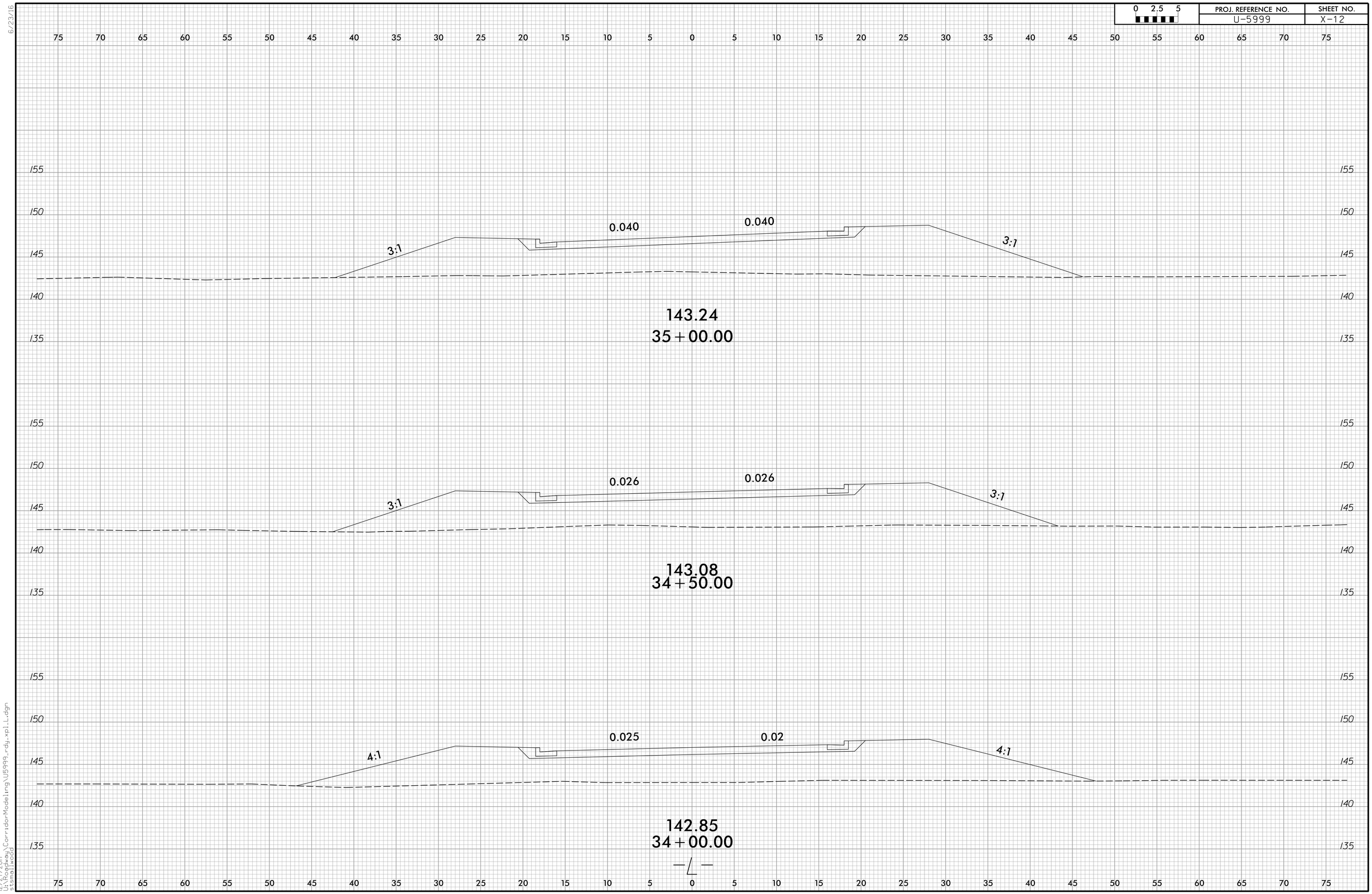

6/23/16

12/27/2017
U:\Projects\CorridorModeling\U5999_rdy_xpl_L.dgn
stsamlawood

0 2.5 5	PROJ. REFERENCE NO.	SHEET NO.
	U-5999	X-13

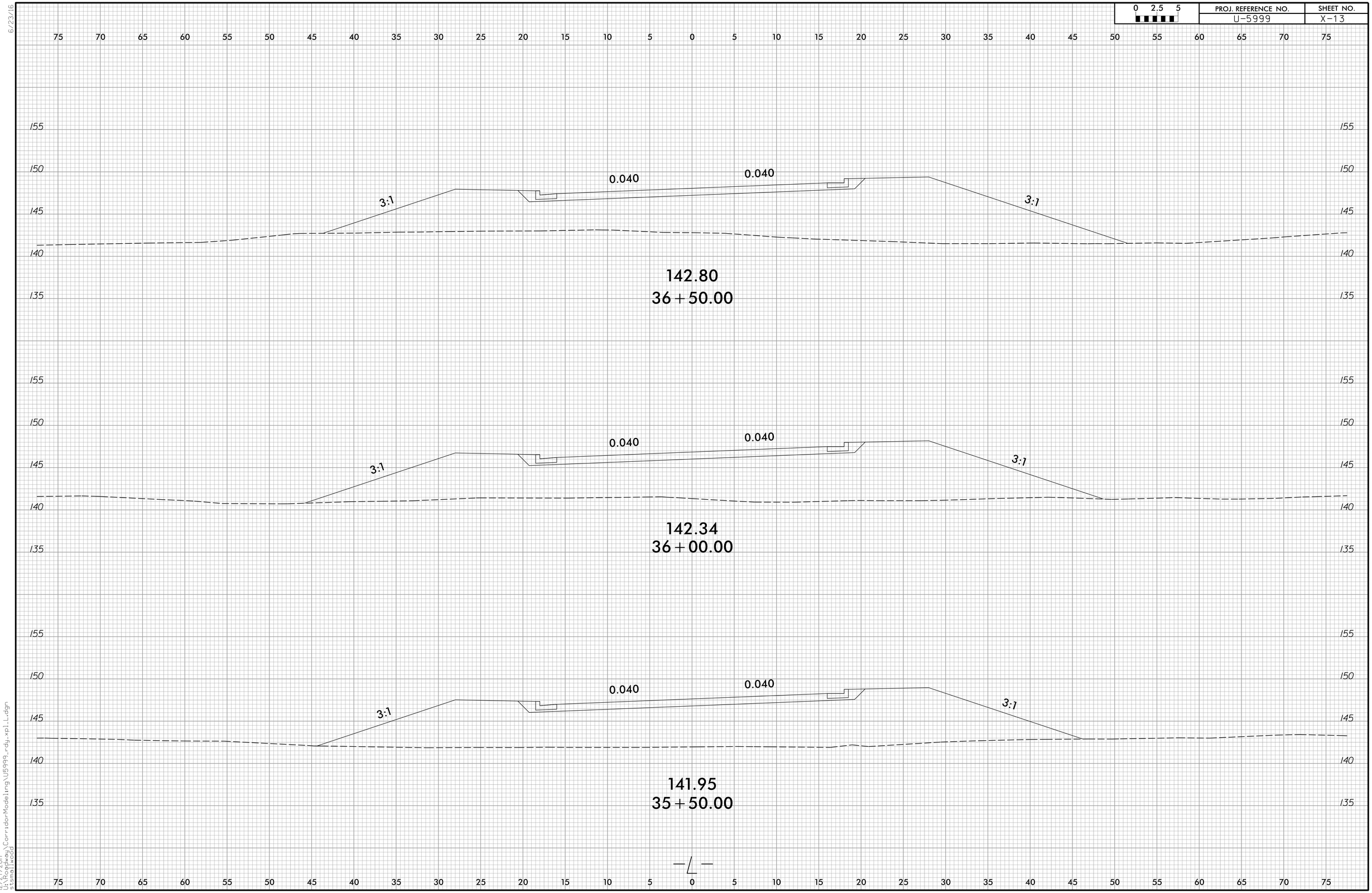

6/23/16

12/27/2017
U:\Roadway\CorridorModeling\U5999_rdy_xpl1.dgn
stsmolwood

0 2.5 5	PROJ. REFERENCE NO.	SHEET NO.
	U-5999	X-14

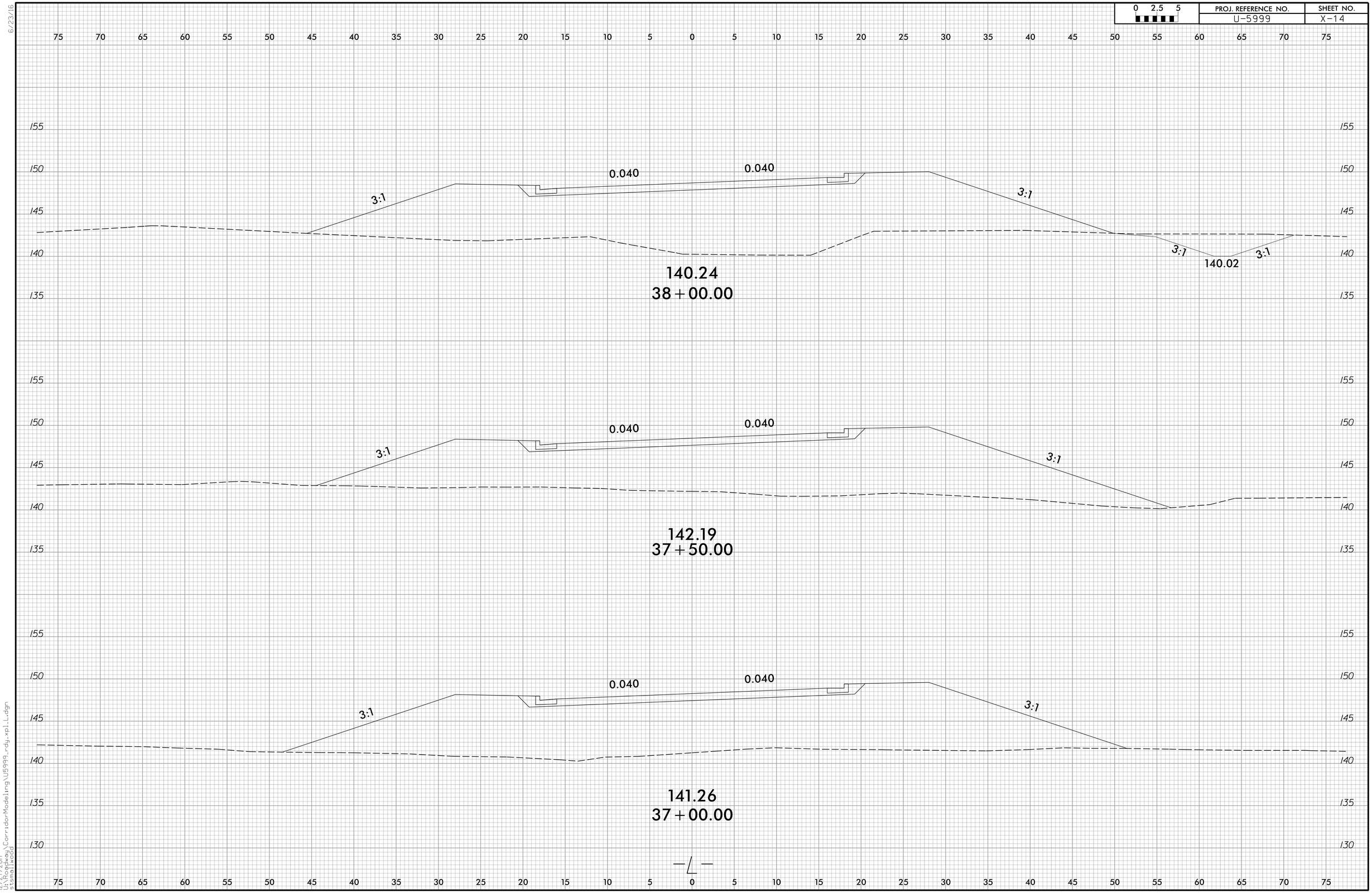

6/23/16

12/27/2017
U:\Roadway\CorridorModeling\U5999_rdy_xpl_L.dgn
stsmolwood

0 2.5 5	PROJ. REFERENCE NO.	SHEET NO.
	U-5999	X-15

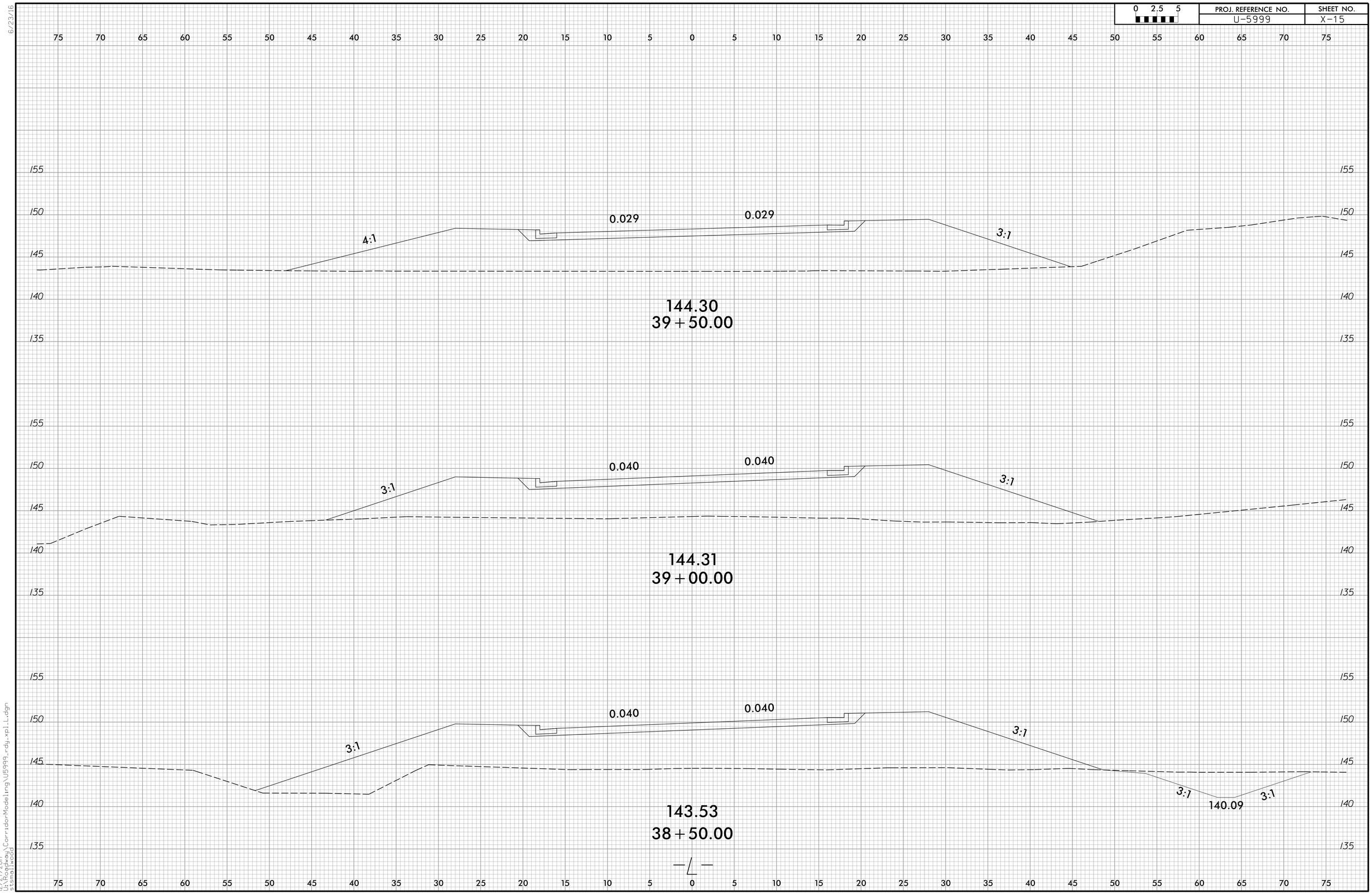

6/23/16
12/27/2017
U:\Projects\CorridorModeling\U5999_rdy_xpl_L.dgn
stsamlawood

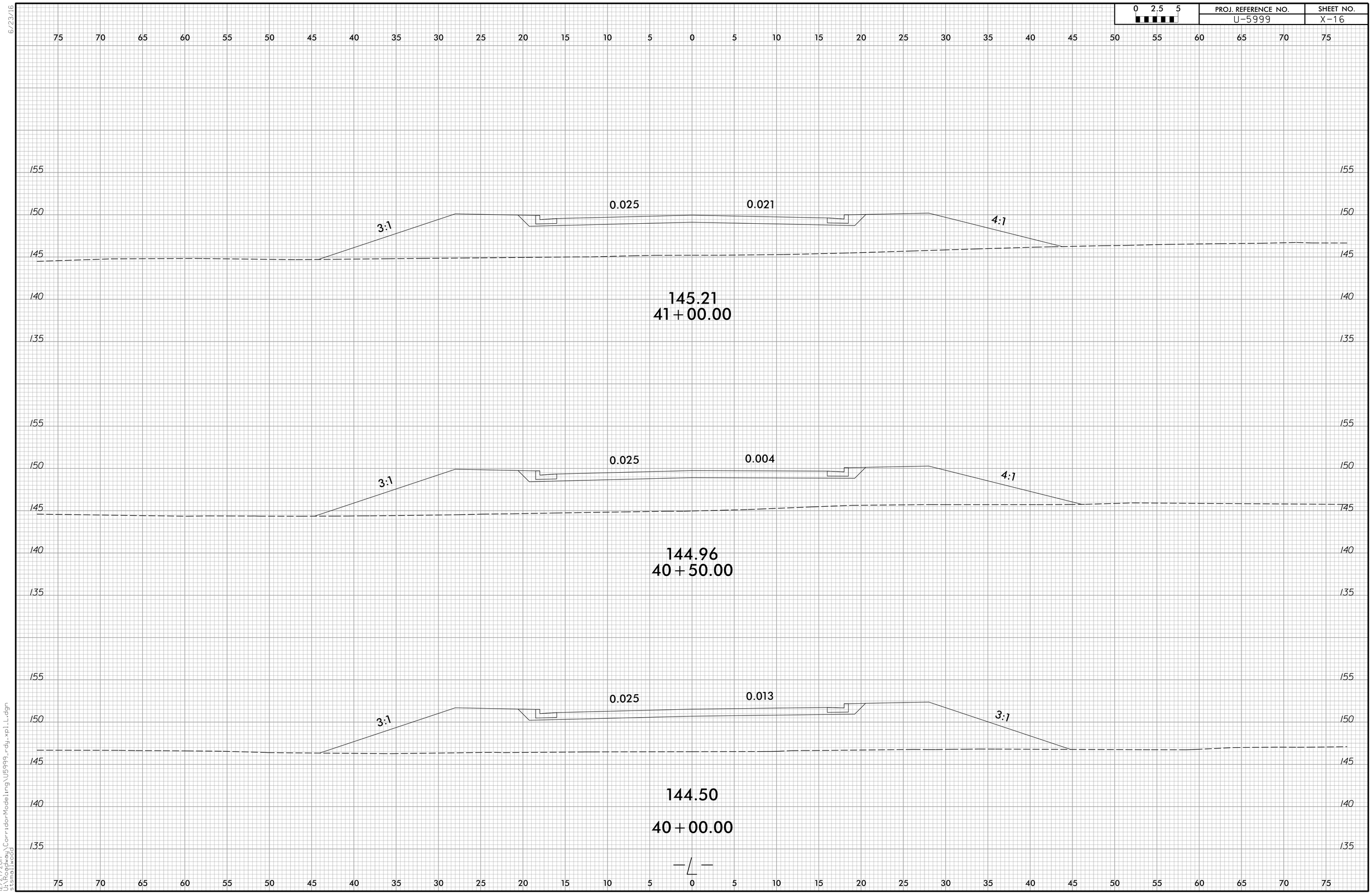

6/23/16
12/27/2017
U:\Projects\Highway\CorridorModeling\U5999_rdy_xpl_L.dgn
stsamlawood

0 2.5 5	PROJ. REFERENCE NO.	SHEET NO.
	U-5999	X-17

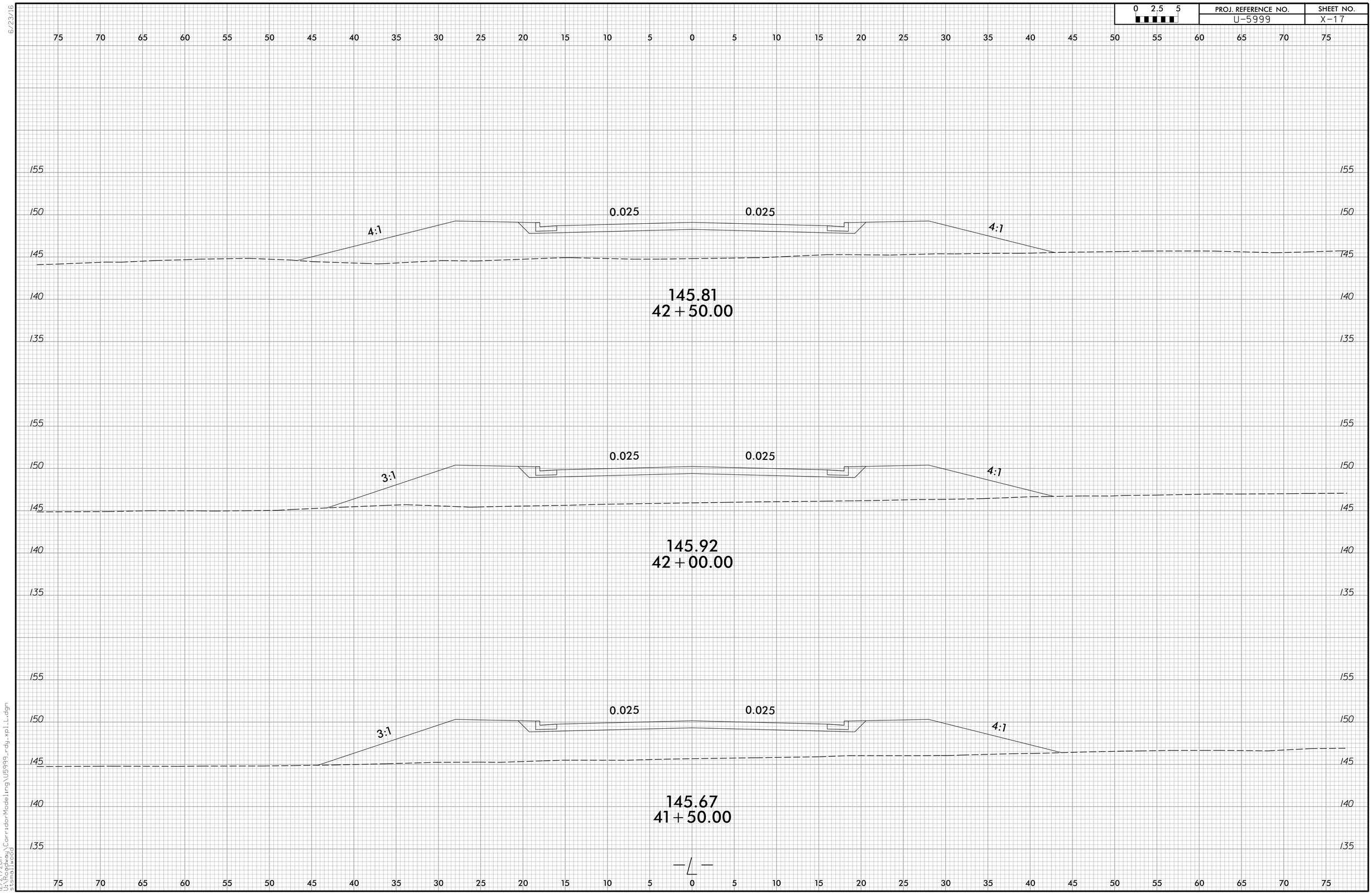

6/23/16
12/27/2017
U:\Projects\CorridorModeling\U5999_rdy_xpl_L.dgn
stsamiwood

0 2.5 5	PROJ. REFERENCE NO.	SHEET NO.
	U-5999	X-18

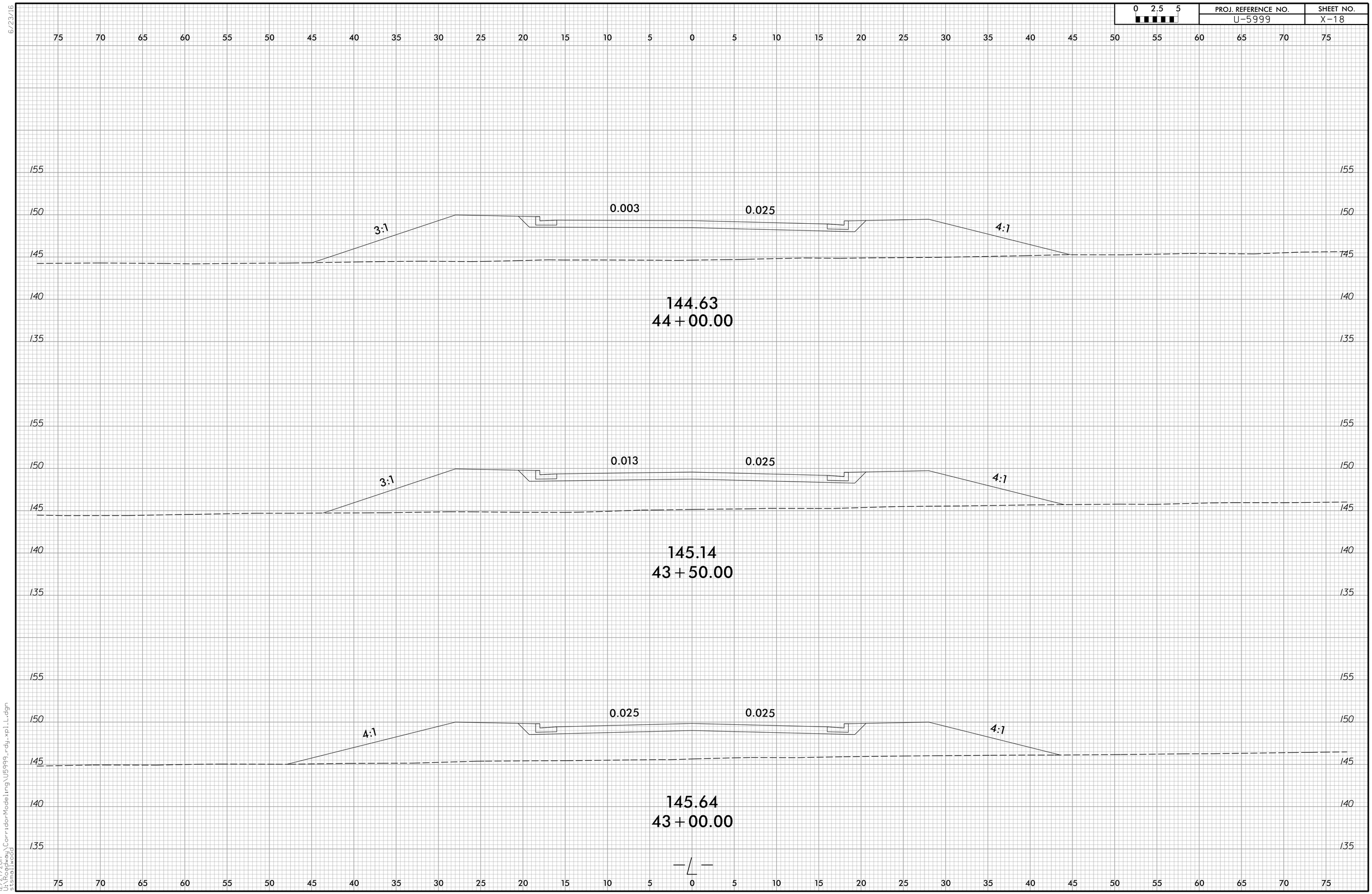

6/23/16
12/27/2017
U-5999_Hwy\CorridorModeling\U5999_rdy_xpl_L.dgn
stsamlawood

0 2.5 5	PROJ. REFERENCE NO.	SHEET NO.
	U-5999	X-19

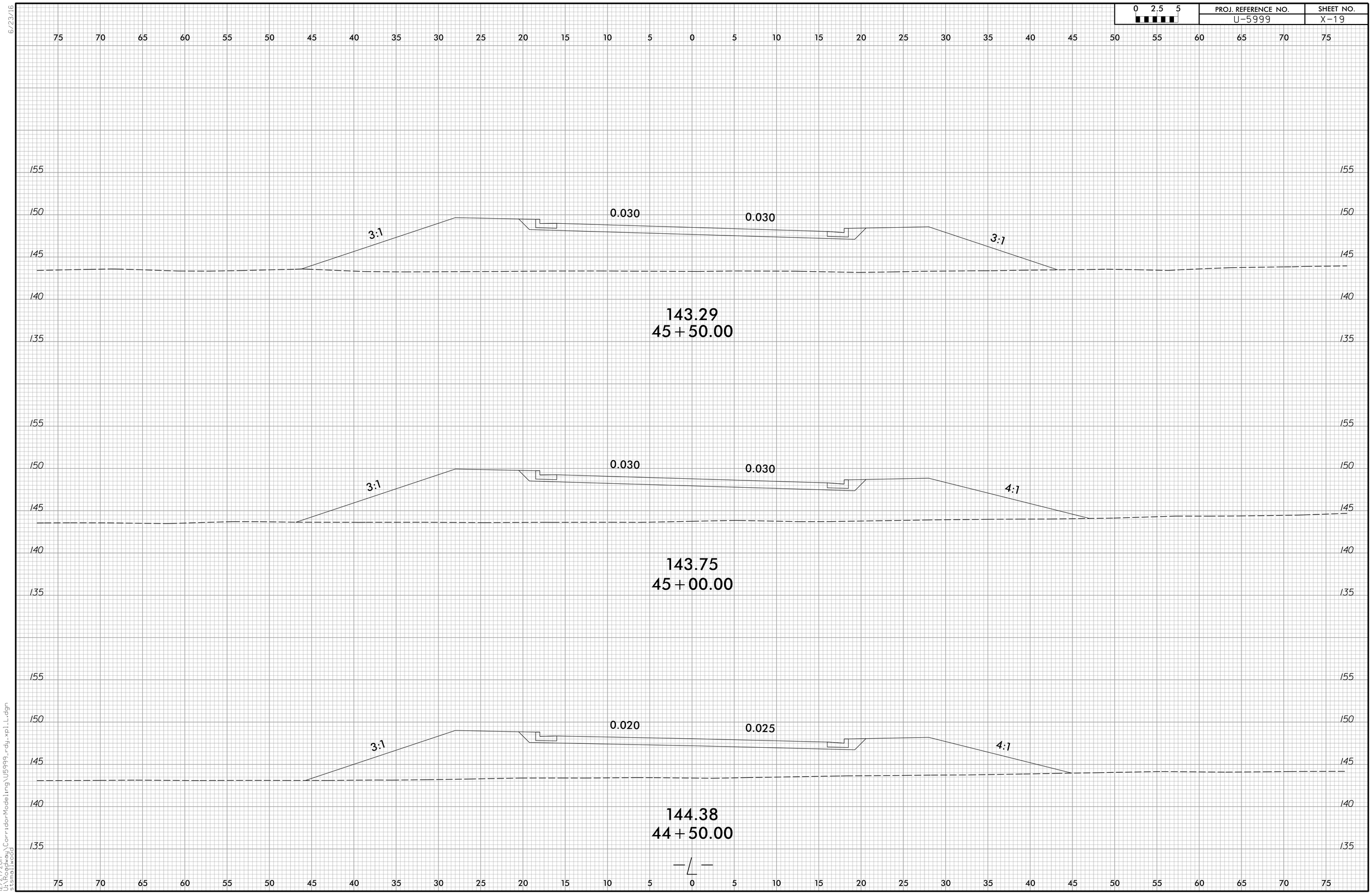

6/23/16
12/27/2017
U:\Projects\Highway\CorridorModeling\U5999_rdy_xpl_L.dgn
stsamiwood

0 2.5 5	PROJ. REFERENCE NO.	SHEET NO.
	U-5999	X-20

UNDERCUT

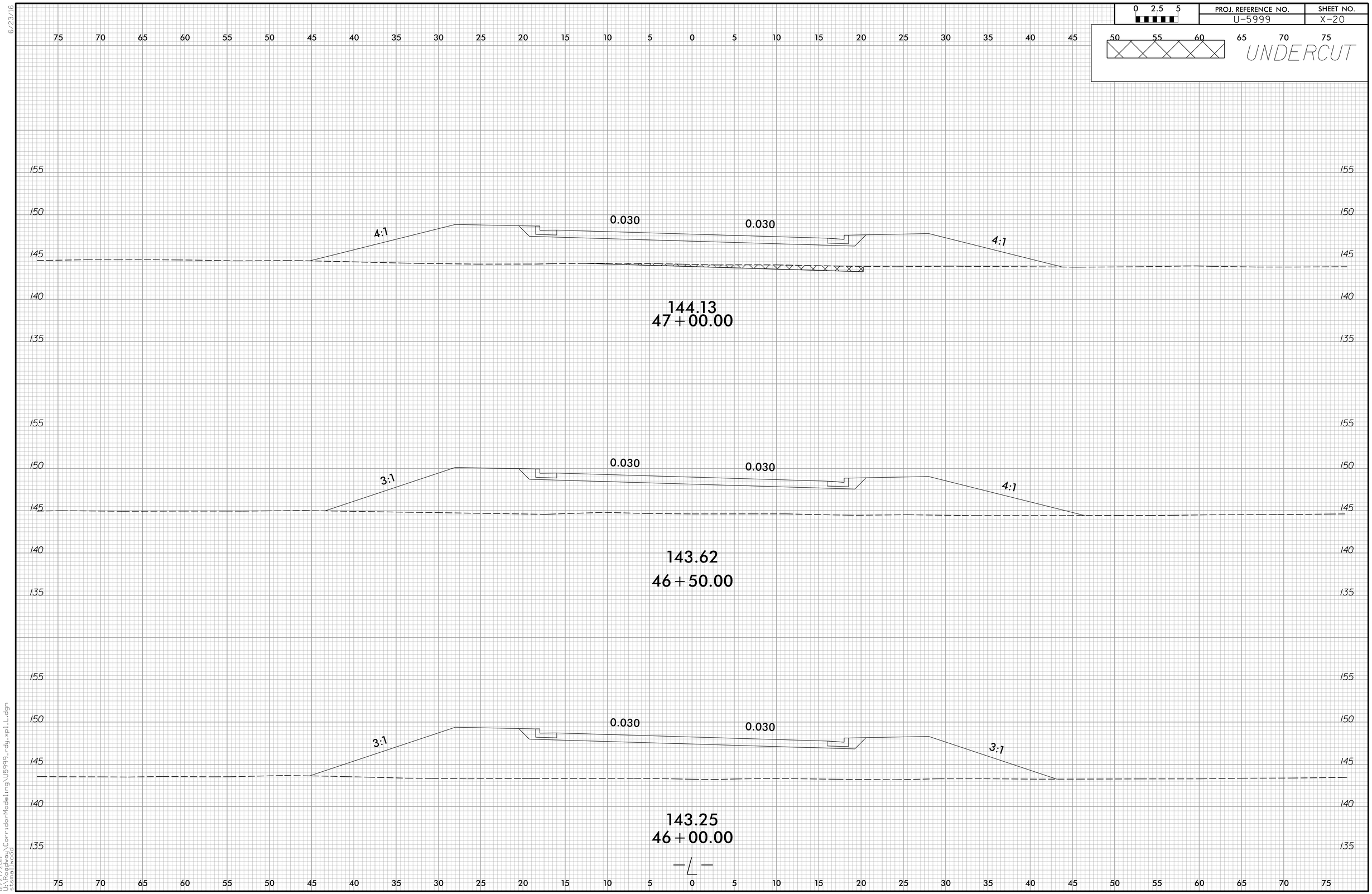

6/23/16
12/27/2017
U:\Projects\Corridor Modeling\U5999_rdy_xpl_L.dgn
stsmallwood

0 2.5 5	PROJ. REFERENCE NO.	SHEET NO.
	U-5999	X-21

UNDERCUT

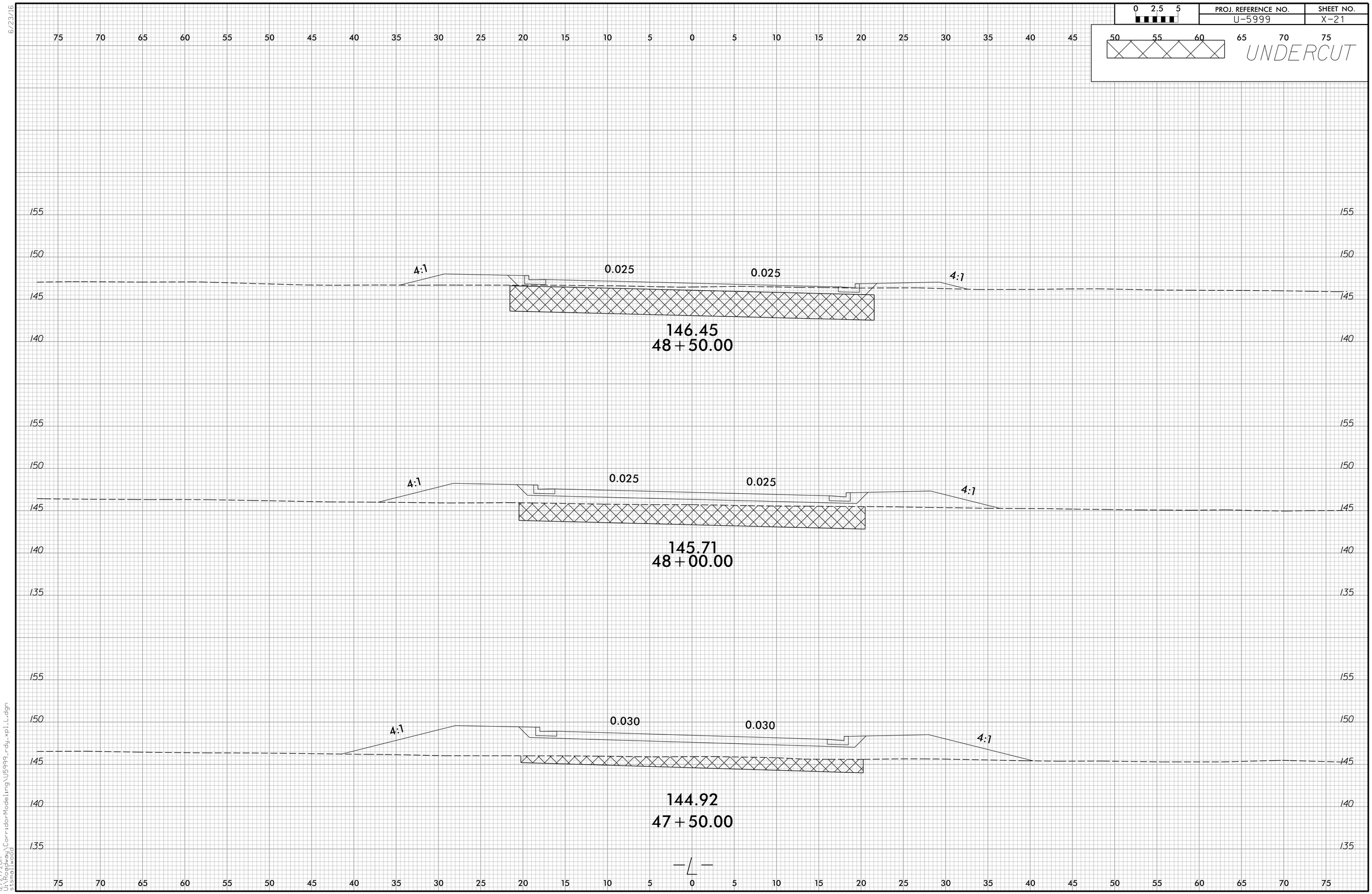

6/23/16
12/27/2017
U:\Projects\CorridorModeling\U5999_rdy_xpl_L.dgn
stsumlwood

6/23/16

0 2.5 5	PROJ. REFERENCE NO.	SHEET NO.
	U-5999	X-22

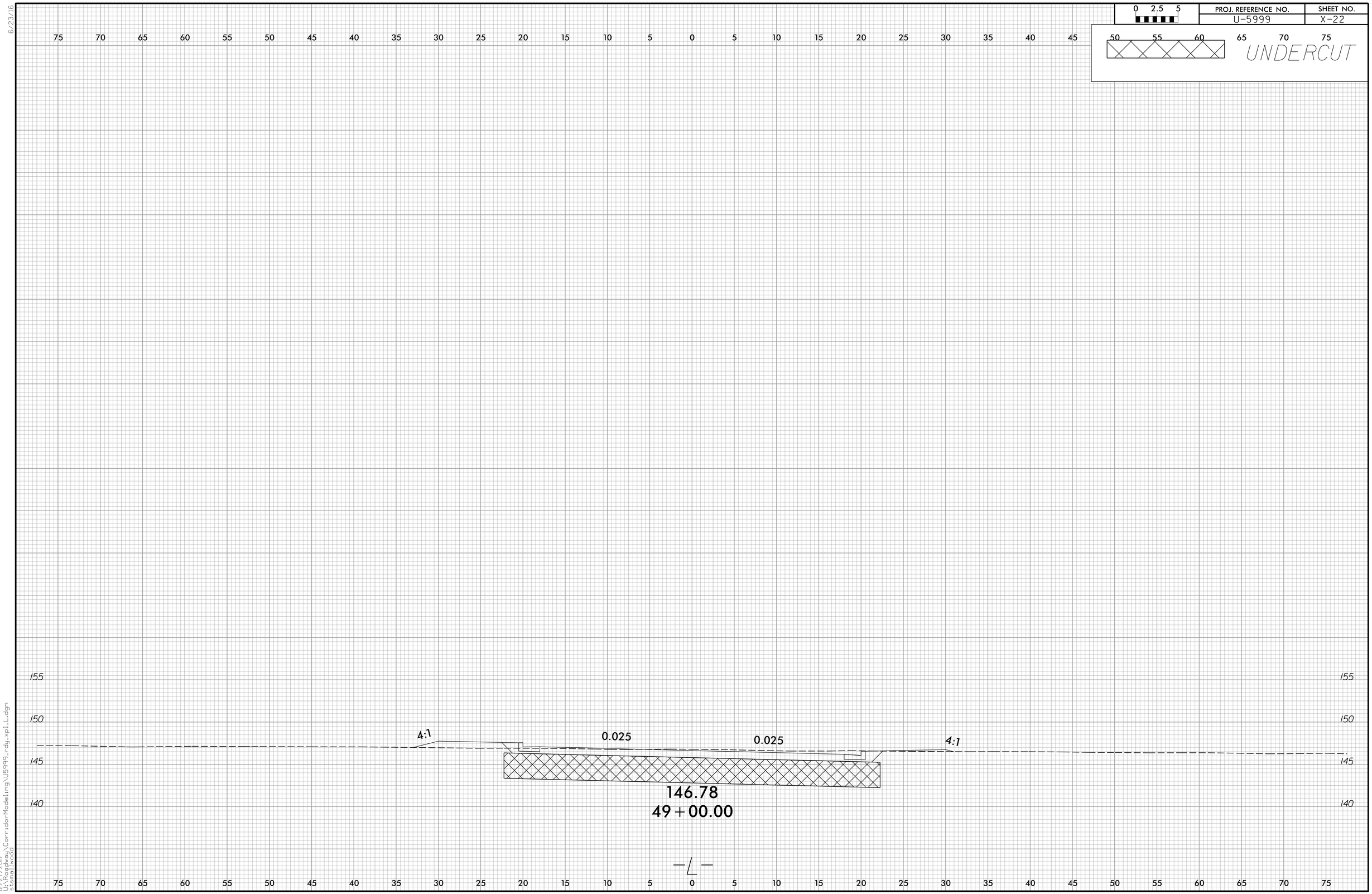

12/27/2017
U-5999 Mainline\CorridorModeling\U5999_rdy_xpl_L.dgn
pwworkuser
stsumlinwood

6/23/16

0 2.5 5	PROJ. REFERENCE NO.	SHEET NO.
	U-5999	X-23

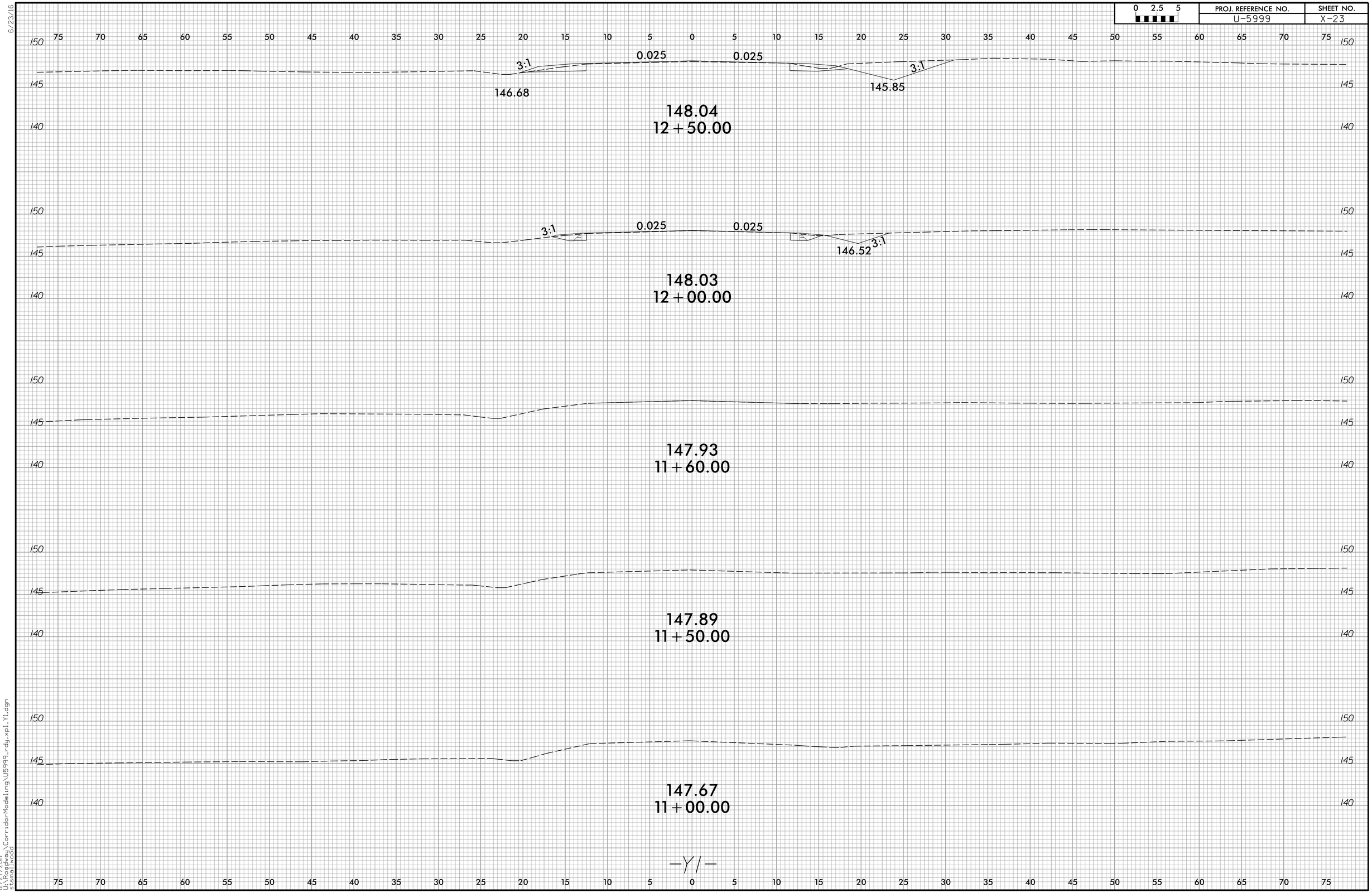

12/27/2017
U:\Roadway\CorridorModeling\U5999_rdy_xpl_Y1.dgn
stsmallwood

6/23/16

0 2.5 5	PROJ. REFERENCE NO.	SHEET NO.
	U-5999	X-24

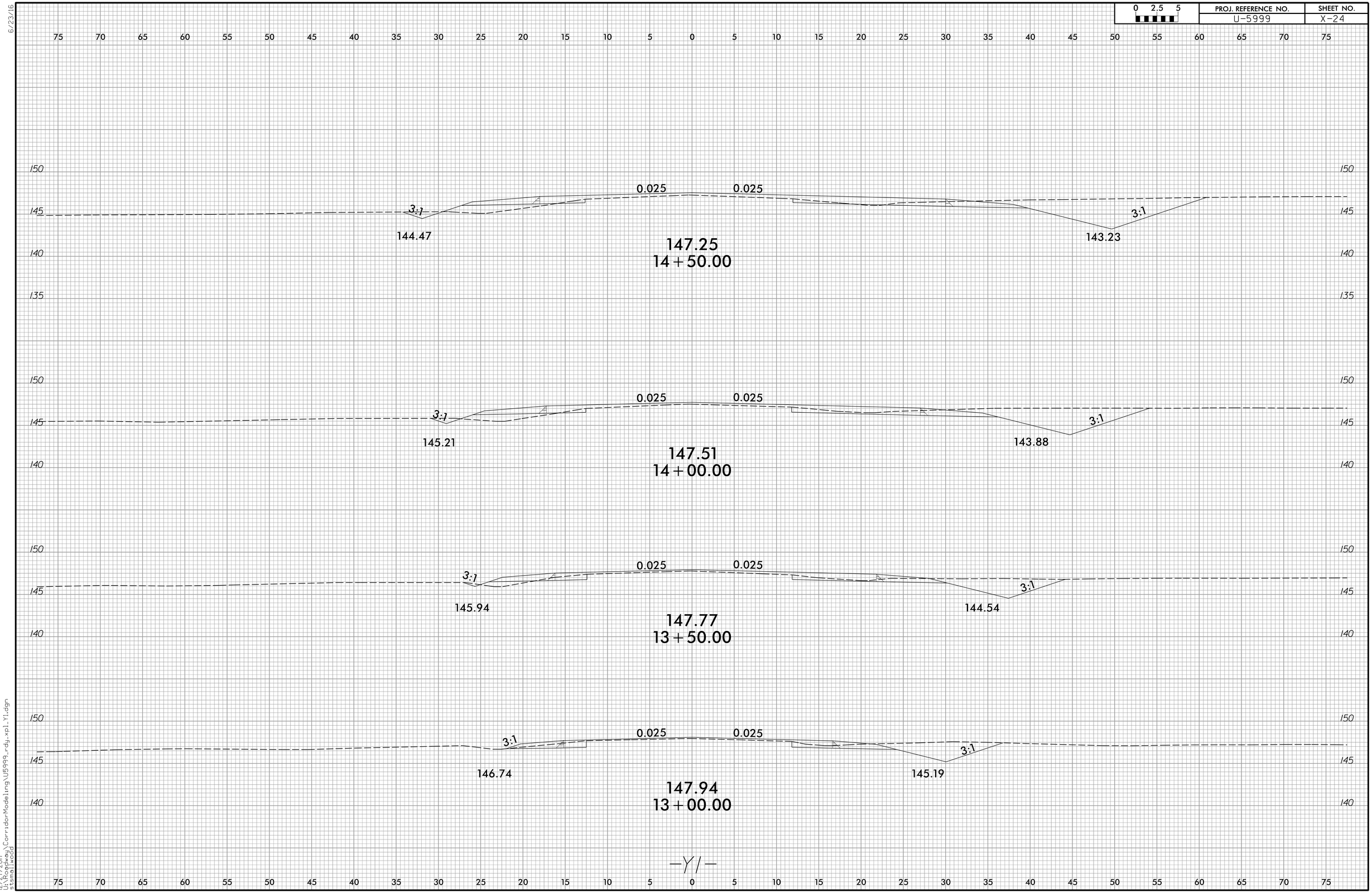

12/27/2017
U:\Roadway\CorridorModeling\U5999_rdy_xpl_Y1.dgn
stsmallwood

0 2.5 5	PROJ. REFERENCE NO.	SHEET NO.
	U-5999	X-25

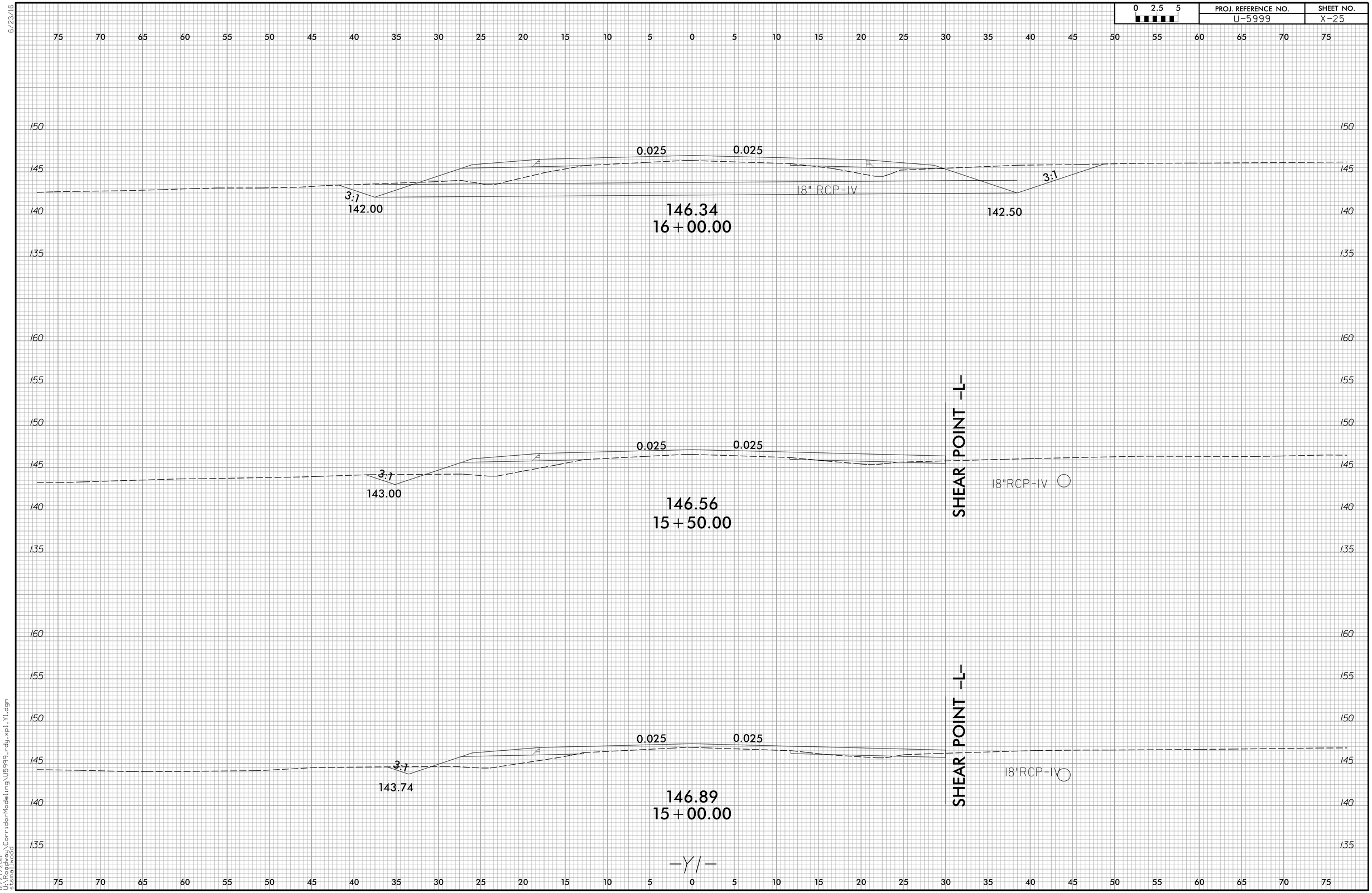

6/23/16

12/27/2017
U:\Roadway\CorridorModeling\U5999_rdy_xpl_Y1.dgn
stsmallwood

0 2.5 5	PROJ. REFERENCE NO.	SHEET NO.
	U-5999	X-26

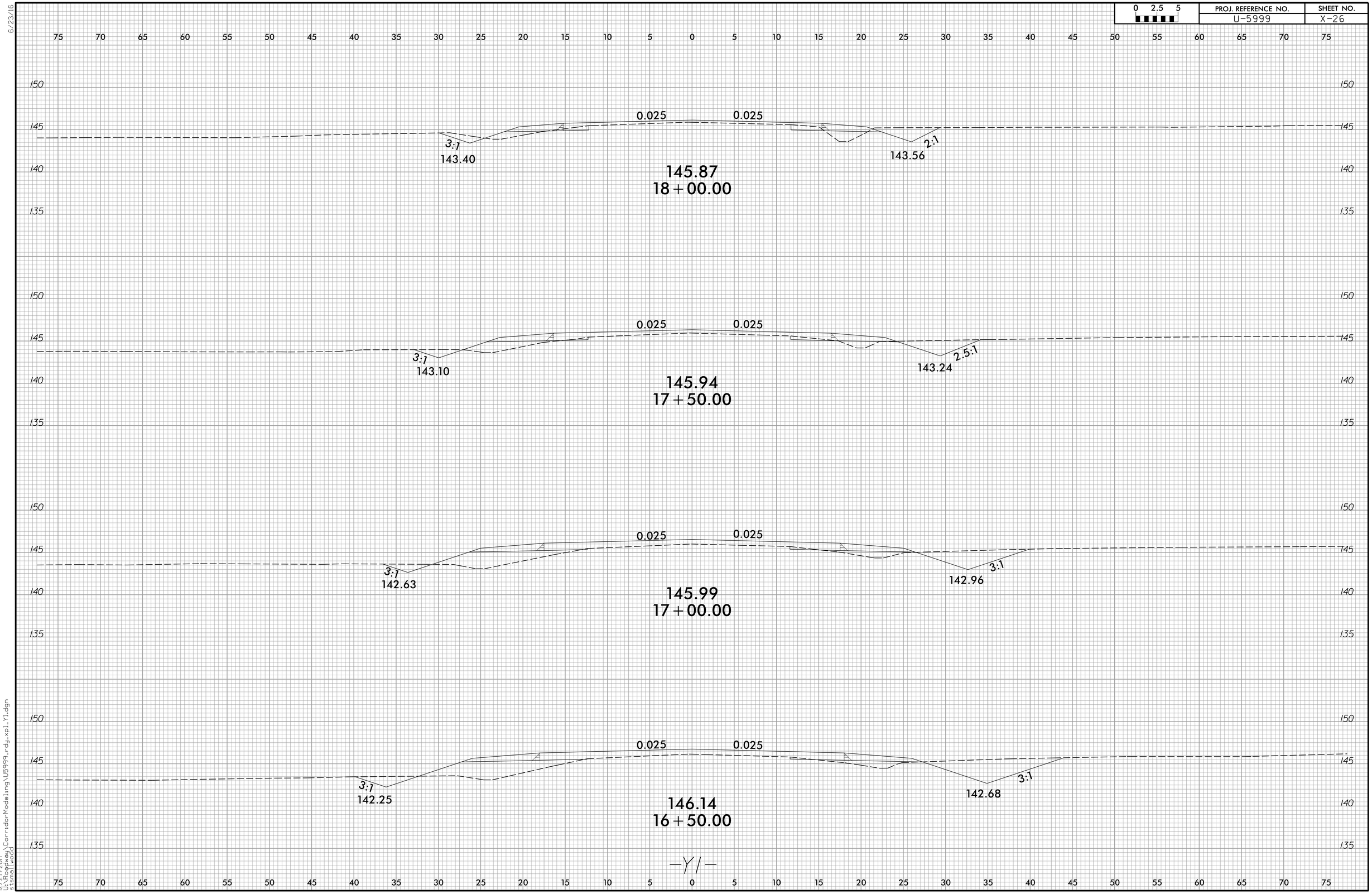

6/23/16

12/27/2017
U:\Projects\CorridorModeling\U5999_rdy_xpl_Y1.dgn
tsmallwood

6/23/16

0 2.5 5	PROJ. REFERENCE NO.	SHEET NO.
	U-5999	X-27

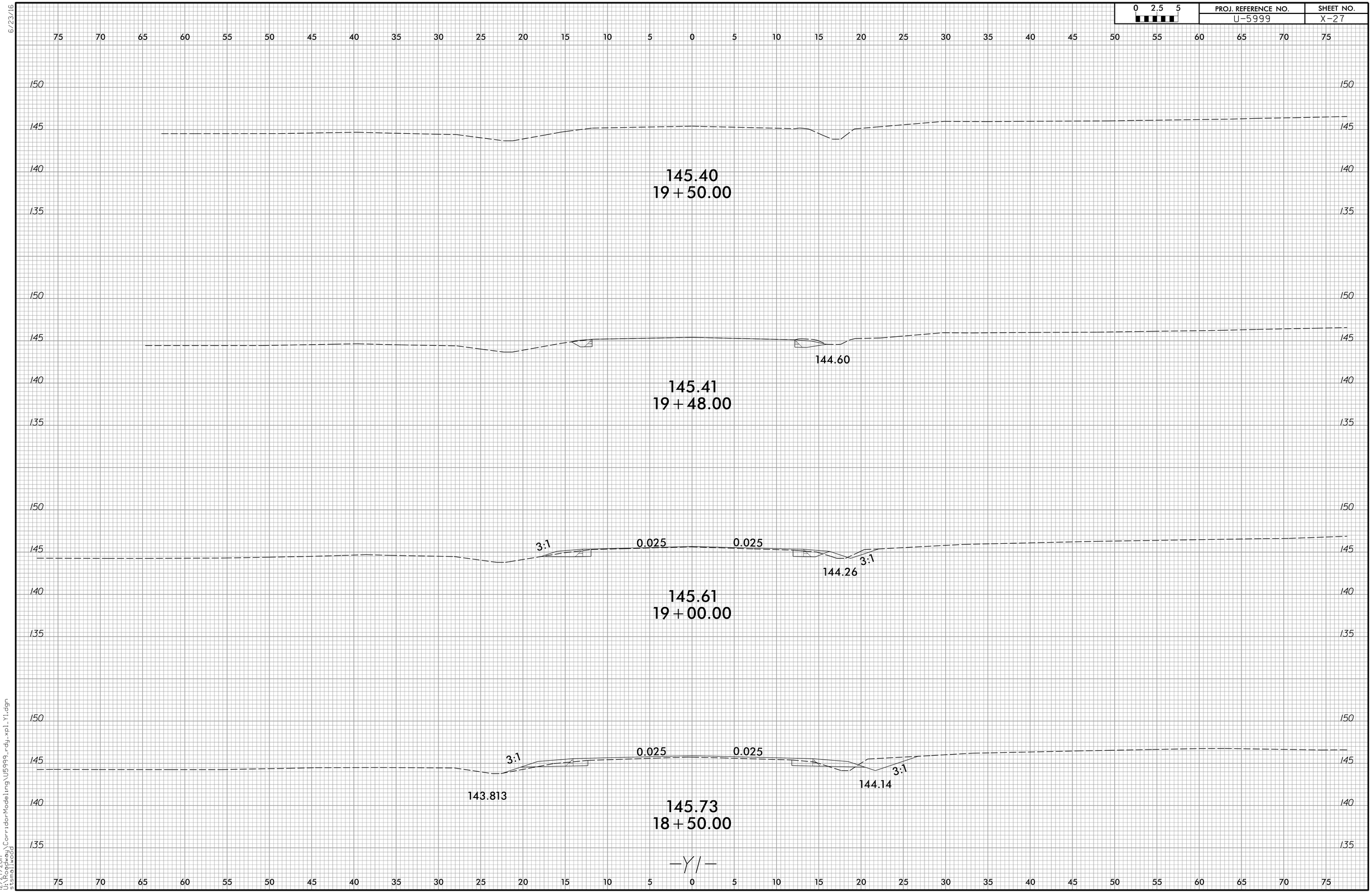

12/27/2017
U:\Roadway\CorridorModeling\U5999_rdy_xpl_Y1.dgn
stsmallwood